Trace®

Series 8000ST

MiniNet User's Manual

Doc. # 011-44723-01
Rev. A September 1994

TABLE OF CONTENTS

Chapter 1: Introduction 1

Section 1-1: Features 2
Section 1-2: Manual Overview 6

Chapter 2: Getting Started 9

Section 2-1: Unpacking and Setting Up 10
Section 2-2: System Startup and Shutdown 17
Section 2-3: System Orientation 19
Section 2-4: System Configuration 24

Chapter 3: Copy 31

Section 3-1: Copy New 32
Section 3-2: Copy Previous 36
Section 3-3: Stream Copy 39
Section 3-4: Format-Only 43

Chapter 4: Compare 47

Section 4-1: Compare New 48
Section 4-2: Compare Previous 52
Section 4-3: Stream Compare 55

Chapter 5: Hard Disk 59

Section 5-1: Master Storage 60
Section 5-2: Maintenance and Diagnostics 75

Chapter 6: Quality Control Features 83

Section 6-1: Data Placement 84
Section 6-2: Retry Limits 86
Section 6-3: Automatic Tests and Adjustments 88
Section 6-4: TraceBack Track Data 94
Section 6-5: Precompensation Optimization 100

Chapter 7: MiniNet Operation 101

Section 7-1: Network Copy and Compare 102
Section 7-2: Softgroups 107

Chapter 8: Troubleshooting 111

Section 8-1: Error Conditions 112
Section 8-2: Error Messages 114
Section 8-3: Diagnostics 150

Chapter 9: Maintenance 161

Section 9-1: Routine Maintenance 162
Section 9-2: Changing Drives 169

Appendices:

A Cross-Verification Issues 173
Section A-1: Gap Bytes 174
Section A-2: Magnetic Index Marks 178
Section A-3: Turbo Mode Step Time 180
B Series 8000ST Menu Structure 181
C Accessories and Options 183
D Software Updates 187

Glossary 189

Index 197

CHAPTER 1
INTRODUCTION

This chapter gives you an overview of the features of your new Series 8000ST system, and describes the layout of this manual.

The following sections are included in this chapter:

- Features
- Manual Overview

Section 1-1: Features

The Series 8000ST is the most advanced member of the Trace family of scalable standalone diskette duplicators. As a scalable technology, the 8000ST can be configured to meet a wide variety of diskette duplication needs. HyperCopy technology provides unsurpassed throughput at the highest quality levels available. The 8000ST also offers TraceBack production information, on-line maintenance and diagnostics, and an advanced set of quality control features.

The 8000ST features MiniNet, which allows you to network up to 20 8000STs with Ethernet cables. Networked 8000STs can share product images and perform group duplication to complete copy, compare, and format-only jobs more efficiently. They also can perform diagnostics and configuration independent of the network.

In addition, there is an upgrade which allows the 8000ST to support extended density format. Contact Trace for availability.

The Series 8000ST offers the following features:

Unprecedented Throughput

The 8000ST features an advanced 2 megabit per second floppy controller and the new high-speed HyperCopy Drive. In addition, the built-in Turbo mode technology duplicates MFM formats approximately 25% faster than traditional three-revolution duplication. The result is an unsurpassed duplication throughput of 300 diskettes per hour.

Ease of Use

All duplication and verification tasks are controlled from the front panel keyboard and display. The front panel of the 8000ST duplicator is designed for ease of use. Copy and compare operations can be started with minimal keystrokes. Context-sensitive help is available for every menu option.

1-1: Features—continued

Automatic Tests and Adjustments

The 8000ST offers a variety of revolutionary features which maximize drive performance. The table below highlights some of the automatic tests and adjustments which separate the 8000ST from the competition.

Feature	Benefit
Continuously-Variable Write Current	Optimizes the write current for each track as the diskette is written
Automatic Asymmetry Adjustment	Measures drive head asymmetry at user defined intervals, and adjusts the write current to correct the effects of head wear
In-Process Head Degaussing	Removes residual magnetism from the drive head after each diskette is ejected
In-Process Chucking Detection (ICD)	Detects mischucked diskettes during duplication
Instantaneous Speed Variation (ISV) Detection	Detects undesirable variations in the speed of the drive motor, which could lead to a modulated signal
Minimum Track Amplitude (MTA)	Ensures that no tracks fall below a user defined minimum amplitude

Built-in Diagnostics

With the 8000ST, you do not have to take a system out of production to verify drive performance. Just place an AAD diagnostics diskette in the input hopper during operation to automatically test four aspects of drive performance: index-to-data, head azimuth, radial head alignment, and track average amplitude. If all tests pass, duplication proceeds without interruption. Additional built-in diagnostics test numerous points on the internal hardware, and aid in maintenance and troubleshooting.

1-1: Features—continued

TraceBack Information Track

The TraceBack information track stores information regarding the diskette production environment and duplication parameters on each duplicated diskette. The TraceBack information is stored on an MFM-encoded track just outside the normal data track area (track 80).

Precompensation and Write Current Control

Users can optimize write current and precompensation tables for individual media lots by modifying the system setup file.

Automatic Format Recognition

The 8000ST is capable of recognizing a wide variety of standard duplication formats (See Table A below). Even formats which the 8000ST does not recognize are automatically duplicated in an appropriate generic format. The 8000ST cannot duplicate copy-protected formats.

The system also identifies the drive type, and alerts the user if the drive is not correct for the format being duplicated. Finally, the 8000ST detects whether the master diskette was duplicated on a PC or a professional duplicator. The 8000ST will "clean up" the quality of PC masters so that the copies are of higher quality than the original.

Table A: Formats Recognized by the 8000ST

Disk Size	Drive Density	Formats
3.5"	High/Low Switchable	MFM 720K, Macintosh, Amiga, Apple II GS*, MFM 1.44 MB, NEC DOS
3.5"	Extended (ED)	MFM 2.88 MB (with ED option only)

* Apple II GS diskettes are recognized, but are duplicated as Macintosh diskettes, because the formats are almost identical. This process will not affect the readability of the duplicated diskettes.

1-1: Features—continued

Format-Only Option

Produce formatted diskettes with a single command, without having to read in a master. Formats available include IBM MS-DOS, Mac HD, and NEC DOS formats.

Maintenance Flags

Counters on the system and the drive prompt the user when it is time for routine cleaning. Built-in software options make it easy to perform preventive maintenance procedures from the front panel.

Optional Master Storage

With the optional hard disk, the 8000ST supports on-line storage of frequently used master images in compressed format. Software menu options make it easy to copy and compare master images from the hard disk, perform file maintenance, and run diagnostics on the hard disk.

Customer Support Services

Trace Customer Support is available to assist you with a highly trained staff of technical representatives. Trace offers factory service, spare parts, maintenance and service contracts, and a variety of training programs. Within the U.S. and Canada, call (800) GO-TRACE. For international numbers, see the preface of this manual.

Section 1-2: Manual Overview

This manual is designed to provide helpful information on the 8000ST. A wide range of material is covered, from basic guidelines on setting up a duplication site, to easy to follow instructions on copying and comparing diskettes, to more advanced maintenance and diagnostic operations. Use the chapter summaries below to help you find the type of information which is appropriate to your needs.

CHAPTER 1: INTRODUCTION

Introduces the 8000ST and describes the basic features and benefits of the system. Contains this manual overview.

CHAPTER 2: GETTING STARTED

Provides all the information you need to begin duplication on your 8000ST. Contains instructions for unpacking the system and powering it on or off. Also covers setting up a MiniNet network of 8000STs. Orients first-time users to the user interface of the 8000ST, and includes information on system configuration.

CHAPTER 3: COPY

Describes the use of the copy menu features to perform unattended diskette duplication of a new or previously loaded master image, or to copy multiple masters in streamlined fashion. Covers all the basic duplication operations, including format-only.

CHAPTER 4: COMPARE

Describes the use of the compare menu features to perform unattended diskette verification against a new or previously loaded master image, or to compare against multiple masters in streamlined fashion. Covers all the basic verification operations.

1-2: Manual Overview—continued

CHAPTER 5: HARD DISK

Contains information about the optional hard disk which can be purchased for the 8000ST. Describes use of the hard disk for long-term storage of master images, and for copying and comparing diskettes without loading a master diskette. Also covers file maintenance capabilities, advanced hard disk maintenance, and hard disk diagnostics.

CHAPTER 6: QUALITY CONTROL FEATURES

Describes the various built-in quality features which enable you to optimize your duplication process. These features include settings for window, dropout, and retries, as well as automatic asymmetry adjustment, In-Process Chucking Detection, Minimum Track Amplitude, Instantaneous Speed Variation, and the TraceBack information track.

CHAPTER 7: MININET OPERATION

Details use of the Trace MiniNet, which is a standard feature on the 8000ST, to share master images and perform group duplication and verification.

CHAPTER 8: TROUBLESHOOTING

Contains tables of error messages which might be displayed on the system LCD and possible error conditions. Also introduces some built-in hardware diagnostic procedures, some of which are only intended for use by advanced technicians.

CHAPTER 9: MAINTENANCE

Provides 8000ST operators with instructions for regular cleaning of equipment and swapping Copy Drives out of the 8000ST. Also describes the built-in diskette counters which track drive and system life and the need for routine maintenance. For advanced maintenance procedures, refer to the Tracer/ST Service Manual.

1-2: Manual Overview—continued

APPENDIX A: CROSS-VERIFICATION ISSUES

A brief summary of the requirements for successfully cross-verifying diskettes between the 8000ST and other Trace duplication systems.

APPENDIX B: SERIES 8000ST MENU STRUCTURE

Shows a tree of the software features available under the option menu. Refers user to appropriate section of this manual to learn about each feature.

APPENDIX C: ACCESSORIES AND OPTIONS

Provides part numbers and descriptions for preventive maintenance supplies which Trace Customer Support recommends you stock. Also describes upgrades, enhancements, and other equipment which Trace sells for the 8000ST.

APPENDIX D: SOFTWARE UPDATES

Explains the installation procedure for system software updates sent out by Trace on floppy diskettes.

CHAPTER 2
GETTING STARTED

This chapter contains instructions for unpacking your system and powering it on or off. It also includes some basic information you might need prior to duplication, including system orientation and the configuration of certain parameters. If your 8000ST is already installed, turn to Chapter 3 to begin fast and easy duplication.

The sections in this chapter are organized as follows:

- Unpacking and Setting Up
- System Startup and Shutdown
- System Orientation
- System Configuration

Section 2-1: Unpacking and Setting Up

This section provides a list of the components which should be included in your 8000ST shipment. It also describes the correct procedures for unpacking the contents of your 8000ST shipment, and setting the unit up for duplication.

Each Series 8000ST shipment should include:

- Series 8000ST
- AC power cord
- Trace Copy Drive (installed in 8000ST)
- Input and accept hoppers
- Series 8000ST user documentation package—Quick Reference Card, Quick Start Card, Tracer/ST Service Manual, and this manual (at least one set per shipment)
- Ethernet cable
- T-connector
- Terminator

If you are missing any part of this package, contact your Trace Customer Support center before proceeding any further. Unpack each Series 8000ST according to the following instructions:

2-1: Unpacking and Setting Up—continued

1. On the outside of the carton, remove the four (4) plastic shipping clips which secure the foam encasing. To remove a clip, squeeze the two ridges of the insert together and pull the insert out of the casing (See Figure 2.1). Then gently pry the outer casing out of the cardboard.

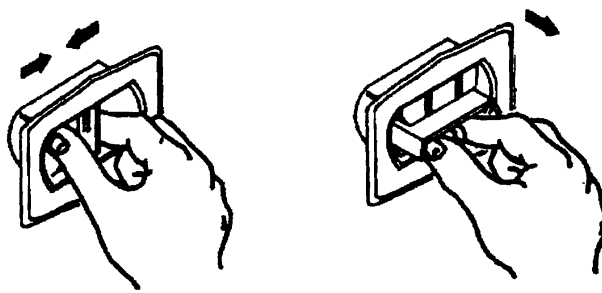

Figure 2.1: Removing a Shipping Clip

2. Lift up on the box cover to pull it away from the foam encasing tray which contains the 8000ST.

3. Cut open the top of the box cover and remove the accessory tray.

4. Remove the 8000ST from the foam encasing and plastic, and place the unit on a stable work surface.

CAUTION
The 8000ST weighs approximately 40 pounds (18 kg). Be sure to lift using your legs for support to avoid back injury. Get someone to help you if the unit is too heavy.

2-1: Unpacking and Setting Up—continued

> **NOTE**
> Retain all packing materials, including the plastic clips, in case you need to send the 8000ST back to Trace for adjustments or repair.

5. Remove any shipping tape and tie-wraps which are visible on the 8000ST and the drive.

6. Make sure the power switch on the rear of the 8000ST is in the off position (0). Attach one end of the power cable to the plug on the rear of the unit. Connect the other end to a wall outlet.

> **NOTE**
> With the correct power cable, the 8000ST will automatically operate at 110 or 220 VAC and at 50 or 60 Hz. No alterations are required.

7. Mount the accept hopper by sliding the hooks on the end of the accept hopper through the slots in the front extension of the 8000ST (See Figure 2.2). Slide the tongue of the hopper under the back plate. (This is intended to be a snug fit.) Press down firmly to lock the accept hopper in place.

8. Install the input hopper in the opening on top of the 8000ST. Insert the tongue of the input hopper into the horizontal slot and press the front of the input hopper firmly downward to secure it.

2-1: Unpacking and Setting Up—continued

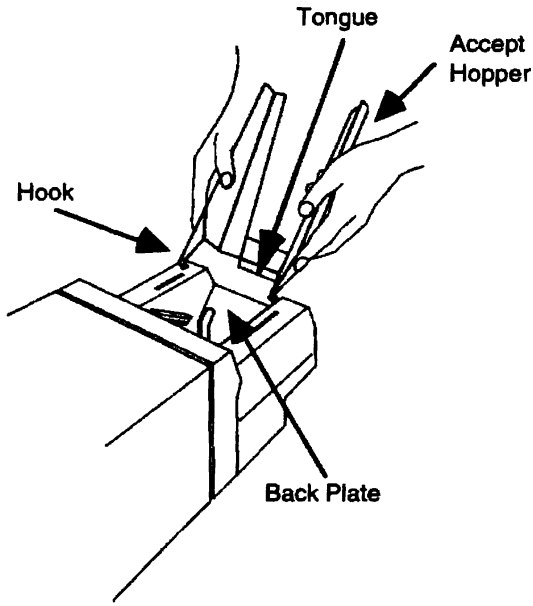

Figure 2.2: Installing the Accept Hopper

9. Repeat steps 1–8 for all 8000STs. Then proceed to Subsection 2-1-1 for instructions on setting up the MiniNet network. For standalone operation, skip to Section 2-2.

2-1-1: MiniNet Configuration

A MiniNet network consists of up to 20 8000STs, each connected to the next by an Ethernet cable, with an Ethernet terminator on each end of the network. The terminators and cables connect to the backs of the 8000STs by means of a T-shaped connector plug. Every 8000ST includes one Ethernet cable, one T-connector, and one terminator. Figure 2.3 shows a diagram of a standard configuration.

2-1: Unpacking and Setting Up—continued

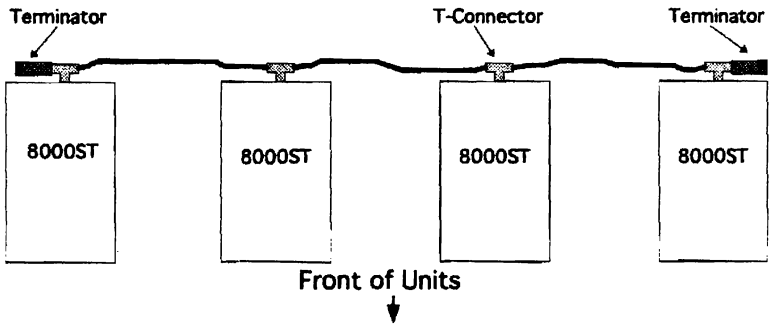

Figure 2.3: MiniNet Configuration for 4 8000STs (Aerial View)

In order to create a network of up to 20 8000STs as shown above, you need the following additional equipment:

- A T-connector for each 8000ST
- An Ethernet cable to connect each 8000ST to the next
- 2 Terminators

Trace provides you with all the equipment you need to establish the network. If you purchase any networking supplies from a source other than Trace, make sure they have an impedance rating of 50 ohms.

Follow these steps to physically set up the MiniNet:

1. In addition to the power plug, there are four connector plugs on the rear panel of the 8000ST, as shown in Figure 2.4. Plug one T-connector into the thin net connector on each unit which will be in the MiniNet. Tighten the collar on the plug to secure the connection. Orient the two branches of the T horizontally. The remaining plugs on the rear panel are not currently used.

2-1: Unpacking and Setting Up—continued

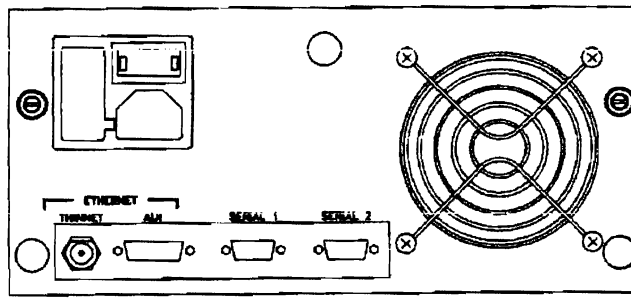

Figure 2.4: Location of Ethernet Connector

2. Viewing the units from the rear, plug one terminator into the left branch of the T-connector on the leftmost unit. Plug the other terminator into the right branch of the rightmost T-connector.

3. Connect the 8000STs with Ethernet cables. Beginning with the leftmost unit, connect one end of one cable to the right branch of the T-connector and connect the other end to the left branch of the T-connector on the neighboring unit, as shown in Figure 2.3. Repeat this process until all the units are connected.

NOTE
Networked 8000STs cannot communicate with other Ethernet networks. Trace recommends keeping the MiniNet completely separate from other existing networks.

2-1: Unpacking and Setting Up—continued

If you followed these instructions exactly, every T-connector should have both outlets filled, by either a cable or a terminator. Proceed to Section 2-2 for instructions on enabling the networking feature.

Section 2-2: System Startup and Shutdown

To start up the 8000ST, just turn on the power switch. The power switch is located on the rear panel of the unit, in the upper left corner. When you start up the 8000ST, it performs a series of self-tests. Do not cancel the self-tests. (See Subsection 8-3-3 for more information on self-tests.)

When the tests are done, the LCD should display the startup screen shown below.

```
Trace Series 8000ST
```

If you receive any error messages during startup, refer to Chapter 8. If you encounter any other problems, contact Trace Customer Support.

The first time you power up networked 8000STs, the MiniNet feature is not enabled. To enable the MiniNet feature through the software menus, follow these instructions:

1. Power on all the units in the network if they are not already powered on.

2. From the startup screen, press the **OPTION** button on the front panel.

3. Press the softkey labeled `[Setup]`, and then press the `[Options]` softkey. Finally, press the `MININET` softkey. The system will display a scrolling screen to allow you to enable the MiniNet feature. (For an introduction to the 8000ST user interface, see Section 2-3.)

```
Set MiniNet operation mode: DISABLE
          [↑]        [↓]        ACCEPT
```

2-2: System Startup and Shutdown—continued

4. Use the up or down arrow softkeys to scroll to the ENABLE option. Press the softkey labeled ACCEPT. This setting will remain even after powering down.

> **NOTE**
> The MiniNet feature may be enabled or disabled at any time on an idle unit. However, you do not need to disable the MiniNet feature in order to exclude a unit from network duplication (See Section 7-2).

5. Repeat steps 2–4 for each unit on the network.

To turn off the 8000ST, cancel the current operation using the **CLR/STOP** button on the front panel. Use the **CLR/STOP** button to return to the 8000ST startup screen (shown above). Then turn off the power switch on the rear panel of the unit. Turning off the unit erases the most recently used master image from system RAM (temporary memory).

To begin duplication, turn to Chapter 3 now. For an introduction to the 8000ST, proceed to Section 2-3, which describes the location of certain common parts and contains an orientation to the 8000ST keypad. Section 2-4 describes some user settings and duplication parameters which are already set by Trace, but which can be altered.

Section 2-3: System Orientation

This section introduces you to the general design and operation of the 8000ST. The first subsection identifies the location of the various system parts you will be using for copy and compare jobs, as well as internal parts which you may wish to be aware of. The remainder of the section details many aspects of the user interface with the system, including the front panel keypad, the menu system, and the help function.

2-3-1: Location of Parts

In ordinary use, the 8000ST requires very little maintenance. Most 8000ST users will only interact with the parts shown in Figure 2.5 below. All copy and compare jobs, routine maintenance, and diagnostics begin from the display panel. Most tasks do not even require the user to open the unit. The rear cover should only be removed when you switch drives or clean the diskette rollers, as described in Chapter 9: Maintenance.

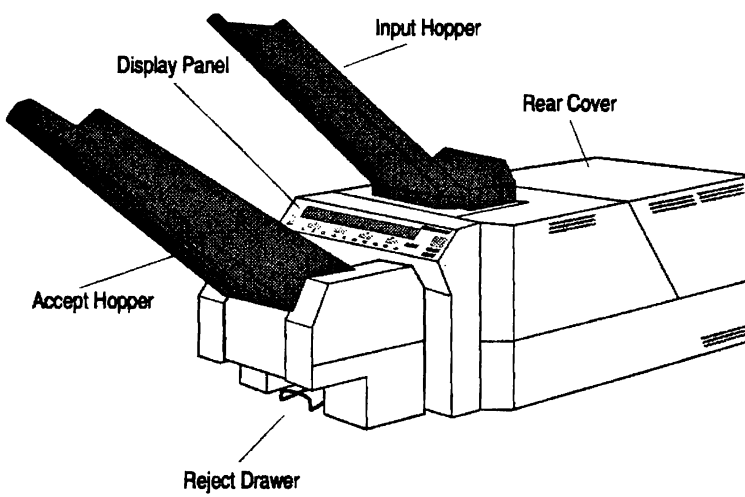

Figure 2.5: External Parts of the 8000ST

2-3: System Orientation—continued

The input hopper, accept hopper, and reject drawer are used for copy and compare jobs. Blank diskettes to be copied or duplicated diskettes to be compared are loaded into the input hopper with the shutters or read/write windows toward the drive. The display panel is used to begin the job. The 8000ST then performs the assigned task, placing all good diskettes in the accept hopper and all failed diskettes in the reject drawer.

Figure 2.6 shows the location of all the major 8000ST internal boards and the optional hard disk for your reference. These components should only be accessed by qualified technicians. For more detailed information, contact Trace Customer Support.

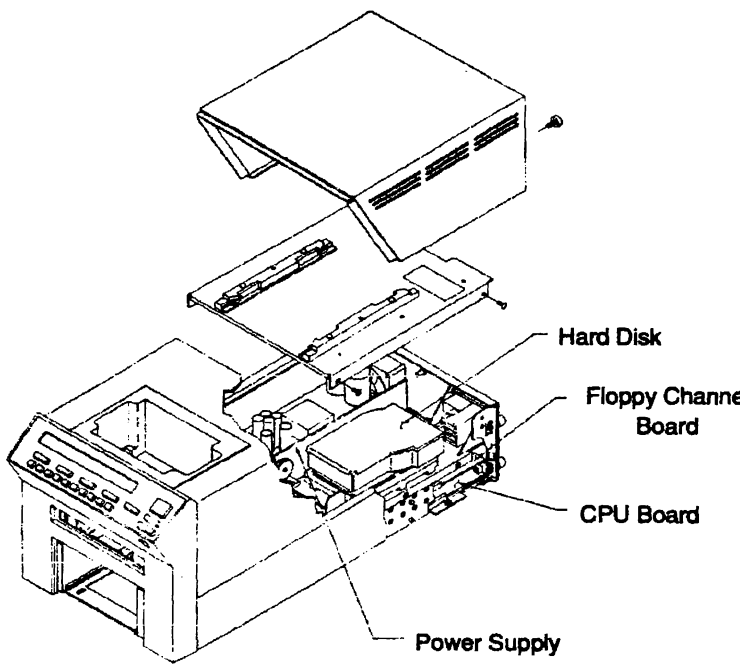

Figure 2.6: Internal Parts of the 8000ST

2-3: System Orientation—continued

2-3-2: User Interface

The front panel of the 8000ST is designed for ease of use. The keyboard consists of four command keys, four softkeys, and ten numeric entry keys (See Figure 2.7). The four command keys are labeled **COPY**, **COMPARE**, **OPTION**, and **CLR/STOP**. These keys function as follows:

COPY	View the copy menu
COMPARE	View the compare menu
OPTION	View all other available options
CLR/STOP	Exit a menu, cancel an operation, or clear a jam

COPY and **COMPARE** can also be double-clicked (pressed twice) to immediately begin copy or compare operations.

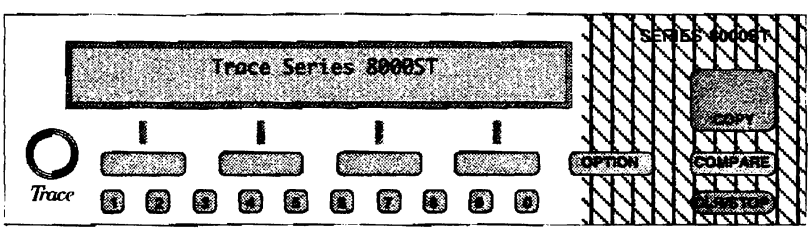

Figure 2.7: Front Panel of the 8000ST

The ten numeric keys can be used to enter a diskette quantity for a copy or compare operation, or to enter digits in an image name or other text field.

The remaining keys are the four softkeys (▭). Their functions vary according to the menu you are viewing. The bottom line of the LCD screen displays the currently enabled functions. The two-line LCD also displays all menu options, help information, and error messages.

2-3: System Orientation—continued

Many of the operations described in this manual begin from the startup screen, shown in Figure 2.7 above. The startup screen is the first screen displayed when you power up the 8000ST. In order to return to the startup screen after completing an operation or receiving an error message, press the **CLR/STOP** key. Depending on where you are in the menu structure, you may have to press the key more than once to reach the startup screen.

> **NOTE**
> Context-sensitive help is available in every menu to clarify menu options for the operator. To get information on any command or softkey option, just hold down the key for that command or option. The LCD will provide a brief description of the operation.

Selecting from Menus

The 8000ST offers three different methods of selecting options and menu items. The first two are the command keys and the softkeys, described above. The command keys can be used to begin some common operations, but are more commonly used to display menus, such as the copy menu or the option menu.

Once a menu is displayed, various menu choices are displayed on the second line of the front panel LCD. Submenus which contain more options are indicated in square brackets (for example, [Utility]). Labels which are in all capital letters (such as RESUME) will begin an operation or display a screen to view or edit. To view a submenu or begin an operation, press the softkey which is located immediately under that label. (For a detailed tree of the 8000ST menu structure, refer to Appendix B or the Series 8000ST Reference Card.)

2-3: System Orientation—continued

The third method which the 8000ST utilizes for selecting options is scrolling screens. Scrolling screens are used when a value needs to be assigned or a file needs to be selected from a list of choices. The scrolling screen allows you to scroll through all available options, and select the correct one. An example of a scrolling screen is:

```
Set job alarm beeping: ENABLE
   [↑]        [↓]                ACCEPT
```

The softkeys associated with the up and down arrows will scroll you continuously through all eligible choices, either forward or backward. To select whichever option is currently displayed (ENABLE in the example above), press the softkey labeled ACCEPT.

Section 2-4: System Configuration

This section contains instructions for viewing the hardware configuration and adjusting certain system settings which control the operation of the 8000ST. All user programmable parameters can be easily altered through the option menu on the front panel.

The hardware configuration is covered in the first part of this section. The remainder of the section describes the different categories of software settings which can be altered by the user:

- Hardware Configuration
- Operating Environment

2-4-1: Hardware Configuration

The hardware configuration can be reviewed from the front panel of the LCD. To learn which hardware options are installed on a particular 8000ST, simply hold down the **OPTION** button for more than 2 seconds while the startup screen is displayed, and the system provides a summary of the hardware features. For example:

```
VERSION: 1.0.0    SONY 42B 4xHD/LD
OPTIONS: 4MB, 4xHD, TURBO, HDD80MB, NET
```

The first line of the LCD shows the revision level of the system software as well as the manufacturer, model, size, and density of the currently installed drive. Line two lists some short codes to indicate which optional hardware has been installed. Note that most of these options come standard on the 8000ST. The table below shows all the possible codes and the options they represent:

2-4: System Configuration—continued

1xHD, 2xHD, 4xHD	Standard (1X), high performance (2X), or HyperCopy (4X) high density floppy controller (should show 4xHD)
2MB, 4MB, 8MB	Amount of RAM installed
TURBO	Turbo mode option installed
HDD80MB, HDD270MB, HDD540MB	Capacity of installed hard disk, if any
NET	MiniNet option installed

2-4-2: Operating Environment

The operating features which can be altered through the option menu are the beeper, the contrast level of the LCD, the write-protection detection setting, and Turbo mode operation. The instructions below describe how to alter these settings.

Disabling the Beeper

The beeper on the 8000ST performs a variety of functions. The 8000ST uses the beeper to report common situations, such as an empty input hopper, and to alert you to abnormal conditions, such as an error or the need for scheduled maintenance.

Although the beeper can be very helpful, you may want to disable the beeper in certain work environments. When the beeper is disabled, announcements and errors are still displayed on the LCD and the LCD flashes to get the user's attention.

To disable the 8000ST beeper, follow the instructions below:

1. From the startup screen, press the **OPTION** key on the front panel of the 8000ST.

2-4: System Configuration—continued

2. Press the softkeys labeled [Setup], [System], [User], and finally BEEPER.

3. Once you select the BEEPER option from the final menu, you will be shown a scrolling screen, which allows you to choose between two beeper settings: ENABLE and DISABLE.

```
Set job alarm beeping: ENABLE
   [↑]        [↓]                ACCEPT
```

4. Use the arrow softkeys to scroll to DISABLE. Press the softkey labeled ACCEPT to save the setting and exit the selection screen.

This setting will remain in effect until you change it. To change the setting back, use these same instructions, but select ENABLE.

LCD Contrast

The LCD contrast refers to the contrast between the dots of the LCD display and the background lighting. Setting the level of contrast is done through the user menu, which is part of the option menu tree. Follow these steps to reach the user menu and adjust the LCD contrast:

1. From the startup screen, press the **OPTION** key on the front panel of the 8000ST.

2. Press the softkeys labeled [Setup], [System], [User], and finally CONTRAST.

2-4: System Configuration—continued

3. Once you select the CONTRAST option from the final menu, a scrolling screen appears which allows you to scroll through a variety of finely tuned contrast settings.

```
        Adjust LCD Dot Contrast
[↑]        [↓]                ACCEPT
```

4. As you scroll through the available contrast settings using the up and down arrow softkeys, the LCD contrast will change immediately. When you like the contrast level, press the ACCEPT softkey to exit the scrolling screen.

This setting will remain in effect until you alter it again, using this same procedure.

In case of the rare situation where the contrast is so dramatically out of adjustment that you can no longer view the menus to correct the problem, the contrast can be coarsely adjusted through a crude interface. To adjust the LCD contrast in large increments, you must return to the startup screen by pressing **CLR/STOP** several times (at most six times). Press the rightmost softkey and keep it depressed. Then use number key **1** to lower the contrast or **2** to increase the contrast.

Write-Protection Detection

In general, diskette drives are configured such that they cannot write information to write-protected diskettes. However, depending on your duplication process, you may wish to alter your drive to write only on write-protected diskettes, or to write to all diskettes, regardless of their write-protection status. On the 8000ST, the write-protection detection can be altered through the software, so that no hardware modification is required.

2-4: System Configuration—continued

Write-protection detection (WRTPRT) is a menu item in the option menu tree. To alter the write-protection setting, follow these instructions:

1. From the startup screen, press the **OPTION** button on the front panel.

2. Press the softkeys labeled [Setup], [Options], then WRTPRT. The system will display a scrolling screen to allow you to choose a write-protection setting.

```
Set write protect sensing mode: INVERT
   [↑]        [↓]                ACCEPT
```

3. Use the up and down arrow softkeys to scroll through the available options. The options are:

ENABLE (default)	write on non-write-protected diskettes only
INVERT	write on write-protected diskettes only
IGNORE	write on all diskettes

> **WARNING**
> Setting the write-protection detection to INVERT or IGNORE allows the system to write on write-protected diskettes. This increases the risk of inadvertently overwriting and destroying a master diskette.

4. When the LCD is displaying the correct option, press the softkey labeled ACCEPT to exit and return to the Options menu.

2-4: System Configuration—continued

The write-protection detection setting will remain in effect even after the system is powered down. Use the instructions above to alter the setting at any time.

Disabling Turbo Mode

The 8000ST offers Turbo mode high-speed duplication as a standard feature. Turbo mode duplicates MFM diskettes up to 25% faster than standard speed by writing each track from the first sector encountered after stepping, instead of waiting for an index mark. Non-MFM formats (such as Amiga) do not duplicate in Turbo mode.

Turbo mode causes write splices to be placed at various gap locations on the diskette, rather than radially aligned. However, diskettes duplicated in Turbo mode do not violate the format specification, and their performance in the field is identical to that of diskettes duplicated without Turbo mode.

By default, Turbo mode is already enabled when you receive your system. Turbo mode can be disabled through the software menus, if desired, but MFM duplication will be slower. To disable (or enable) Turbo mode, follow these instructions:

1. From the startup screen, press the **OPTION** button on the front panel.

2. Press the softkeys labeled `[Setup]`, `[Options]`, and finally TURBO. The system will display a scrolling screen to allow you to disable Turbo mode.

```
Set Turbo Mode: DISABLE
  [↑]      [↓]                ACCEPT
```

2-4: System Configuration—continued

3. Use the up or down arrow softkeys to scroll to DISABLE or ENABLE. Press the softkey labeled ACCEPT. This setting will remain even after powering down.

CHAPTER 3
COPY

Copying a master without saving the image file on a hard disk is the easiest way to duplicate on the 8000ST. Copying a diskette involves writing information from the master onto the diskette, and then verifying that the information was written correctly.

Most duplication options are available in the copy menu, which is accessed with the **COPY** button. The basic softkey options under the copy menu are labeled PREVIOUS and NEW. In addition, the [Batch] submenu accesses the STREAM option. These options are all variations on single-step, unattended duplication without using a hard disk.

If your system has an internal hard disk, an additional softkey will be labeled SELECT. For information on utilizing the hard disk for duplication, refer to Section 5-1.

With the NEW option, you can load a master diskette and immediately begin unattended duplication. PREVIOUS allows you to make more copies of the last master image copied or compared without rereading the master. STREAM duplicates multiple masters in a single job.

The final topic discussed in this chapter is the format-only option, which is available through the options menu. Format-only produces formatted diskettes without using a master diskette.

This chapter contains the following sections:

- Copy New
- Copy Previous
- Stream Copy
- Format-Only

Section 3-1: Copy New

The **NEW** option under the copy menu is used to duplicate a master image onto a stack of diskettes with minimal operator action. The first time you duplicate a master on the 8000ST, all you have to do is power up the system, place the master and the blank diskettes in the input hopper, and choose **NEW** from the copy menu. The system will read in (load) the master diskette and create a master image in temporary memory (RAM). Then it will duplicate the image which it has stored in RAM.

Since **NEW** is the most common copy option on the 8000ST, you can access it with a simple shortcut. Pressing the **COPY** button a second time is the same as pressing the **NEW** softkey on the copy menu.

To perform unattended duplication of a master diskette, follow these instructions:

1. If the system is not turned on, power up the system according to the instructions in Section 2-2. You should be viewing the 8000ST startup screen.

2. Place the master diskette in the input hopper. Then place any number of blank diskettes on top of the master.

> **NOTE**
> If you wish to load the master image into RAM now, but duplicate it later, don't put blank diskettes in any of the input hoppers.

3. If you wish to specify an exact number of copies to make, enter the quantity now, using the numeric keys on the front panel keypad. If a quantity is entered, the 8000ST will stop copying once the specified quantity of diskettes are passed, and placed in the accept hopper.

3-1: Copy New—continued

4. Press **COPY**. The system will display the copy options, as shown below. (If a hard disk is installed, the fourth softkey will be labeled SELECT.) As a shortcut, you can press **COPY** twice (three times if you have a hard disk installed). This will automatically select the NEW option, to begin loading a new master and duplicating it.

```
                Copy a Master Disk
PREVIOUS      NEW        [Batch]
```

5. To load a new master and begin duplication, press the NEW softkey. If a hard disk is installed in your 8000ST, the system will give you the option of naming the image you are about to load and saving it on the hard disk. Press the fourth softkey, ACCEPT, to refuse this option. (See Section 5-1 for information on saving master image files.)

6. The system will immediately begin reading the master diskette and creating a master image in RAM. While reading the master, the 8000ST determines whether it is a gold master, created on a PC or workstation, or a professionally duplicated silver master (See the glossary). While the master is being read, the LCD displays the track number being read and the format (if it recognizes the format), or the size, density, and encoding type of an unrecognized format.

3-1: Copy New—continued

7. The system proceeds with duplication and displays the status of the job in the following screen:

```
COPYING              TRK:31        PASS:4
IBM 720K                           FAIL:0
```

To stop the duplication job at any time, press the **CLR/STOP** key on the front panel. Pressing the **CLR/STOP** key once instructs the system to stop duplication after finishing the current diskette. Pressing the **CLR/STOP** key twice stops the system immediately, and the current diskette is rejected.

8. Accepted diskettes, including the master diskette, will be placed in the accept hopper on the front of the 8000ST in first-in, first-out order. Any rejected diskettes will be in the reject drawer, under the accept hopper. Jammed diskettes are also placed in the reject drawer, but are not counted as failed diskettes.

9. When an input hopper is empty, the system will beep and prompt:

```
INPUT HOPPER EMPTY
CONTINUE    QUIT    MUTE
```

If you wish to make more copies of the same master, place additional blank diskettes in the input hopper and press the CONTINUE softkey. If you are done, press the QUIT softkey. Use MUTE to mute the beeper without canceling or continuing the job.

3-1: Copy New—continued

10. If you choose QUIT or you abort the job, the system displays the final status of the job with the message:

```
COPY JOB <IBM 720K> CANCELLED
PASS:25    FAIL:2
```

    Press **CLR/STOP** to return to the startup screen.

11. If any errors occur, refer to Chapter 8: Troubleshooting.

After you have duplicated diskettes using NEW, the master remains in temporary memory (RAM) until another master is loaded (using the NEW option of the copy or compare menu) or until the system is powered down. When a master image is in RAM, you can duplicate it or compare duplicated copies against it without using a master diskette.

For information on making additional copies of the master which resides in RAM memory, see Section 3-2: Copy Previous. To compare duplicated diskettes against the master in RAM, see Section 4-2: Compare Previous.

Section 3-2: Copy Previous

When you copy or compare a master diskette as described in Sections 3-1 and 4-1, the master diskette is loaded into the system and a master image is created in RAM. This master image remains in RAM until the system is powered down or until a new master image is loaded, using the NEW option on the copy or compare menu.

To duplicate the master which is currently residing in RAM, follow these instructions:

1. From the 8000ST startup screen, place any number of blank diskettes in the input hopper.

2. If you wish to specify an exact number of copies to make, enter the quantity now, using the numeric keys on the front panel keypad. If a quantity is entered, the 8000ST will stop copying once the specified quantity of diskettes are passed, and placed in the accept hopper.

3. Press **COPY**. The system will display the copy options, as shown below. (If a hard disk is installed, the fourth softkey will be labeled SELECT.)

```
                Copy a Master Disk
 PREVIOUS      NEW       [Batch]
```

4. To begin duplication, press the PREVIOUS softkey. The system will begin copying the previously loaded image onto the blank diskettes. If you receive the message MUST READ IN A MASTER IMAGE, that means there is no master in RAM. You must return to Section 3-1 and follow the instructions for duplicating a new master.

3-2: Copy Previous—continued

5. The system proceeds with duplication and displays the status of the job in the following screen:

```
COPYING                TRK:31        PASS:4
IBM 720K                             FAIL:0
```

To stop the duplication job at any time, press the **CLR/STOP** key on the front panel. Pressing the **CLR/STOP** key once instructs the system to stop duplication after finishing the current diskette. Pressing the **CLR/STOP** key twice stops the system immediately, and the current diskette is rejected.

6. Accepted diskettes will be placed in the accept hopper on the front of the 8000ST. Any rejected diskettes will be in the reject drawer, under the accept hopper. Jammed diskettes are also placed in the reject drawer, but are not counted as failed diskettes.
7. When the input hopper is empty, the system will prompt:

```
INPUT HOPPER EMPTY
CONTINUE    QUIT    MUTE
```

If you wish to make more copies of the same master, place additional blank diskettes in the input hopper and press the CONTINUE softkey. If you are done, press the QUIT softkey. Use MUTE to mute the beeper without canceling or continuing the job.

3-2: Copy Previous—continued

8. If you choose QUIT or you abort the job, the system displays the final status of the job with the message box:

```
COPY JOB <IBM 720K> CANCELLED
PASS:25     FAIL:2
```

   Press **CLR/STOP** to return to the startup screen.

9. If any errors occur, refer to Chapter 8: Troubleshooting.

Section 3-3: Stream Copy

The 8000ST CopyStream feature allows you to duplicate multiple masters in a single, standalone job by using specially prepared marker disks to separate masters from target diskettes. A utility to create these special marker disks is located under the option menu.

During a CopyStream job, a diskette which follows a marker disk is recognized as a master, and is copied to all subsequent diskettes until the system encounters another marker disk.

This section contains instructions for creating the marker disks, and then using the marker disks to enable streamlined duplication of multiple masters.

3-3-1: Create Marker Disks

Marker disks have a unique recording on track 0 which the 8000ST recognizes during CopyStream. When the 8000ST encounters a marker disk during a stream job, it immediately ejects it into the accept hopper and treats the next diskette in the input hopper as a master.

Marker disks cannot be read or copied by the 8000ST or any other professional duplication system. If a marker disk is inserted during any operation other than CopyStream, it will be rejected.

NOTE
Because marker disks are written with a strong write current, they should not be used for any other purpose.

Trace strongly recommends that you use distinctive diskettes (such as brightly colored diskettes) as marker disks, so that you can easily identify the marker disks at your site and in the accept hopper.

3-3: Stream Copy—continued

To create marker disks, follow these instructions:

1. Place any number of brightly colored blank diskettes in the input hopper. You will need one marker disk for every master in your stream job.

2. From the startup screen, press the **OPTION** button on the front panel. Press the softkey labeled [Setup]. Then press the key labeled [System] and then [Init].

3. Use the -more- softkey to display additional options. Press the softkey labeled MARKERS.

4. Press CONTINUE to begin making marker disks. The marker disks will be placed in the accept hopper. To stop making marker disks, press the **CLR/STOP** button or wait for the input hopper to be empty and press the QUIT softkey.

3-3-2: Copy

In order to stream copy multiple masters, you need one marker disk for every master diskette in your job. If you have not made enough marker disks, refer back to Subsection 3-3-1.

To stream copy multiple masters, follow these instructions:

1. If the system is not turned on, power up the system according to the instructions in Section 2-2. You should be viewing the 8000ST startup screen.

2. Place a marker disk in the input hopper. Place your first master diskette on top of the marker disk.

3-3: Stream Copy—continued

> **WARNING**
> You must place a marker disk before each master diskette, or the 8000ST will overwrite your master diskette. For additional protection, Trace recommends write-protecting your master diskettes.

3. Place the target diskettes (blank diskettes) for the first master diskette in the input hopper on top of the master diskette.

4. Place another marker disk on top of the diskettes already in the hopper. Then place another master diskette in the hopper, and place the target diskettes for that master on top of the master diskette.

5. Repeat step 4 for all master diskettes you want to duplicate.

6. Press **COPY**. The system will display the copy options, as shown below. (If a hard disk is installed, the fourth softkey will be labeled SELECT.)

```
                Copy a Master Disk
PREVIOUS      NEW        [Batch]
```

7. Press the softkey labeled [Batch]. Press STREAM to begin the stream copy job.

   The 8000ST ejects the first marker disk, reads in the first master diskette, and copies it to every diskette until the next marker disk. The 8000ST then reads the master diskette after the second marker disk and copies it to all the diskettes following it, until all the copies are made or the job is canceled.

3-3: Stream Copy—continued

8. To stop the duplication job at any time, press the **CLR/STOP** key on the front panel. Pressing the **CLR/STOP** key once instructs the system to stop duplication after finishing the current diskette. Pressing the **CLR/STOP** key twice stops the system immediately, and the current diskette is rejected.

9. Marker disks, masters, and accepted diskettes will be placed in the accept hopper, on the front of the 8000ST. Any rejected diskettes will be in the reject drawer, under the accept hopper. Jammed diskettes are also placed in the reject drawer, but are not counted as failed diskettes.

The system will proceed until the input hopper is empty. If any errors occur, refer to Chapter 8: Troubleshooting.

Section 3-4: Format-Only

In addition to copying images from master diskettes, the 8000ST has the ability to produce preformatted blank diskettes without reading in a master. The blank diskettes are formatted in a format that is appropriate to the media type and the drive being used.

The available formats are shown in the table below. If the drive installed is capable of more than one format, the system prompts the user to choose between the possible formats.

Disk Size	Drive Density	Formats
3.5"	High/Low Switchable	MFM 720K, MFM 1.44 MB, Mac 1.44 MB, NEC J-3100
3.5"	Extended	MFM 2.88 MB

To format blank diskettes, follow these instructions:

1. If the system is not turned on, power up the system according to the instructions in Section 2-2. You should be viewing the 8000ST startup screen.

2. Place any number of blank diskettes in the input hopper.

3. Press the **OPTION** key on the front panel.

4. From the option menu, press the softkey labeled FORMAT. The system will display the available format options based on the type of drive installed in the 8000ST.

```
Format: IBM PC 3.5HD (1.44M)
   [↑]        [↓]                ACCEPT
```

3-4: Format-Only—continued

5. If only one format is available, the arrow keys will be disabled. If the drive installed in the system is capable of duplicating more than one format, use the arrow softkeys (↑ and ↓) to select the correct format. Press the softkey labeled ACCEPT to begin formatting.

6. The system will display the message BUILDING FORMAT IMAGE... . The status of the job will be displayed in the following screen:

```
COPYING              TRK:31        PASS:4
IBM 1.44                           FAIL:0
```

   To stop the duplication job at any time, press the **CLR/STOP** key on the front panel. Pressing the **CLR/STOP** key once instructs the system to stop duplication after finishing the current diskette. Pressing the **CLR/STOP** key twice stops the system immediately, and the current diskette is rejected.

7. Accepted diskettes will be placed in the accept hopper, on the front of the 8000ST. Any rejected diskettes will be in the reject drawer, under the accept hopper. Jammed diskettes are also placed in the reject drawer, but are not counted as failed diskettes.

8. When the input hopper is empty, the system will beep and prompt:

```
INPUT HOPPER EMPTY
CONTINUE    QUIT    MUTE
```

3-4: Format-Only—continued

If you wish to format more diskettes, place additional blank diskettes in the input hopper and press the CONTINUE softkey. If you are done, press the QUIT softkey. Use MUTE to mute the beeper without canceling or continuing the job.

9. If you choose QUIT or you abort the job, the system displays the final status of the job with the message box:

```
COPY JOB <IBM 720K> CANCELLED
PASS:25     FAIL:2
```

Press **CLR/STOP** to return to the startup screen.

10. If any errors occur, refer to Chapter 8: Troubleshooting.

CHAPTER 4
COMPARE

This chapter discusses the various options for comparing, or verifying, a master without saving the master image on a hard disk. Verification is the process of comparing every track on a duplicated diskette to the master image of the same product, and rejecting diskettes which do not match the master image exactly.

All verification options are available in the compare menu, which is accessed using the **COMPARE** button. The basic softkey options under the compare menu are labeled PREVIOUS and NEW. In addition, the [Batch] submenu accesses the STREAM option. These options are all variations on single-step, unattended verification without using a hard disk.

If your system has an internal hard disk, an additional softkey will be labeled SELECT. For information on utilizing the hard disk for duplication or verification, refer to Section 5-1.

With the NEW option, you can load a master diskette and immediately begin comparing duplicated diskettes against that master. PREVIOUS allows you to compare more duplicated diskettes against the last master image copied or compared without rereading the master. STREAM compares duplicated diskettes against multiple masters in a single job.

This chapter contains the following sections:

- Compare New
- Compare Previous
- Stream Compare

Section 4-1: Compare New

The NEW option under the compare menu is used to compare (or verify) a master image against a stack of diskettes with minimal operator action. To verify a master on the 8000ST, all you have to do is power up the system, place the master and the duplicated diskettes in the input hopper, and choose NEW from the compare menu. The system will read in (load) the master diskette and create a master image in temporary memory (RAM). Then it will compare the remaining diskettes against the image which it has stored in RAM.

Since NEW is the most common compare option on the 8000ST, you can access it with a simple shortcut. Double-clicking the **COMPARE** button is the same as pressing the NEW softkey on the compare menu.

To perform unattended verification against a master diskette, follow these instructions:

1. If the system is not turned on, power up the system according to the instructions in Section 2-2. You should be viewing the 8000ST startup screen.

2. Place the master diskette in the input hopper. Then place any number of copies of that master on top of the master diskette.

> **NOTE**
> If you wish to load the master image into RAM now, but compare against it later, don't put any duplicated diskettes on top of the master diskette.

4-1: Compare New—continued

3. If you wish to specify an exact number of diskettes to compare, enter the quantity now, using the numeric keys on the front panel keypad. If a quantity is entered, the 8000ST will stop comparing once the specified quantity of diskettes are passed, and placed in the accept hopper.

4. Press **COMPARE**. The system will display the compare options, as shown below. (If a hard disk is installed, the fourth softkey will be labeled SELECT.) As a shortcut, you can press **COMPARE** twice (three times if you have a hard disk installed). This will automatically select the NEW option, to begin loading a new master and comparing against it.

```
Compare against a Master Disk
PREVIOUS    NEW    [Batch]
```

5. To load a new master and begin verification, press the NEW softkey. If a hard disk is installed in your 8000ST, the system will give you the option of naming the image you are about to load and saving it on the hard disk. Press the fourth softkey, ACCEPT, to refuse this option. (See Section 5-1 for information on saving master image files.)

6. The system will immediately begin reading the master diskette and creating a master image in RAM. While reading the master, the 8000ST determines whether it is a gold master or a silver master (See the glossary). While the master is being read, the LCD displays the track number being read and the format (if it recognizes the format), or the size, density, and encoding type of an unrecognized format.

4-1: Compare New—continued

7. The system proceeds with verification and displays the status of the job in the following screen:

```
COMPARING          TRK:31        PASS:4
IBM 720K                         FAIL:0
```

To stop the compare job at any time, press the **CLR/STOP** key on the front panel. Pressing the **CLR/STOP** key once instructs the system to stop verification after finishing the current diskette. Pressing the **CLR/STOP** key twice stops the system immediately, and the current diskette is rejected.

8. Accepted diskettes, including the master diskette, will be placed in the accept hopper on the front of the 8000ST in first-in, first-out order. Any rejected diskettes will be in the reject drawer, under the accept hopper. Jammed diskettes are also placed in the reject drawer, but are not counted as failed diskettes.

9. When the input hopper is empty, the system will beep and prompt:

```
INPUT HOPPER EMPTY
CONTINUE    QUIT    MUTE
```

If you wish to compare additional diskettes against the same master, place more duplicated diskettes in the input hopper and press the `CONTINUE` softkey. If you are done, press the `QUIT` softkey. Use `MUTE` to mute the beeper without canceling or continuing the job.

4-1: Compare New—continued

10. If you choose QUIT or you abort the job, the system displays the final status of the job with the message box:

```
COMPARE JOB <IBM 720K> CANCELLED
PASS:25     FAIL:2
```

Press **CLR/STOP** to return to the startup screen.

11. If any errors occur, refer to Chapter 8: Troubleshooting.

After you have copied or compared diskettes using NEW, the master remains in temporary memory (RAM) until another master is loaded (using the NEW option of the copy or compare menu) or until the system is powered down. When a master image is in RAM, you can duplicate it or compare duplicated copies against it without using a master diskette.

For information on making copies of the master which resides in RAM, see Section 3-2: Copy Previous. To compare duplicated diskettes against the master in RAM, see Section 4-2: Compare Previous.

Section 4-2: Compare Previous

When you copy or compare a master diskette as described in Sections 3-1 and 4-1, the master diskette is loaded into the system and a master image is created in RAM. This master image remains in RAM until the system is powered down or until a new master image is loaded, using the NEW option on the copy or compare menu.

To compare duplicated diskettes against the master which is currently residing in RAM, follow these instructions:

1. From the 8000ST startup screen, place any number of copies of the currently loaded master in the input hopper.

2. If you wish to specify an exact number of diskettes to compare, enter the quantity now, using the numeric keys on the front panel keypad. If a quantity is entered, the 8000ST will stop comparing once the specified quantity of diskettes are passed, and placed in the accept hopper.

3. Press **COMPARE** on the master system. The system will display the compare options, as shown below. (If a hard disk is installed, the fourth softkey will be labeled SELECT.)

```
      Compare against a Master Disk
PREVIOUS     NEW      [Batch]
```

4. To begin verification, press the PREVIOUS softkey. The system will begin comparing the previously loaded image against the duplicated diskettes. If you receive the message MUST READ IN A MASTER IMAGE, that means there is no master in RAM. You must return to Section 4-1 and follow the instructions for comparing against a new master.

4-2: Compare Previous—continued

5. The system proceeds with verification and displays the status of the job in the following screen:

```
COMPARING          TRK:31        PASS:4
IBM 720K     .                   FAIL:0
```

To stop the compare job at any time, press the **CLR/STOP** key on the front panel. Pressing the **CLR/STOP** key once instructs the system to stop verification after finishing the current diskette. Pressing the **CLR/STOP** key twice stops the system immediately, and the current diskette is rejected.

6. Accepted diskettes will be placed in the accept hopper, on the front of the 8000ST. Any rejected diskettes will be in the reject drawer, under the accept hopper. Jammed diskettes are also placed in the reject drawer, but are not counted as failed diskettes.

7. When the input hopper is empty, the system will prompt:

```
INPUT HOPPER EMPTY
CONTINUE    QUIT    MUTE
```

If you wish to compare more duplicated diskettes against the same master, place additional diskettes in the input hopper and press the `CONTINUE` softkey. If you are done, press the `QUIT` softkey. Use `MUTE` to mute the beeper without canceling or continuing the job.

4-2: Compare Previous—continued

8. If you choose QUIT or you abort the job, the system displays the final status of the job with the message box:

```
COMPARE JOB <IBM 720K> CANCELLED
PASS:25 . FAIL:2
```

Press **CLR/STOP** to return to the startup screen.

9. If any errors occur, refer to Chapter 8: Troubleshooting.

Section 4-3: Stream Compare

The 8000ST CopyStream feature allows you to compare against multiple masters in a single, standalone job by using specially prepared marker disks to separate masters from target diskettes. A utility to create these special marker disks is located under the option menu.

During a CopyStream job, a diskette which follows a marker disk is recognized as a master, and is compared against all subsequent diskettes until the system encounters another marker disk.

This section contains instructions for creating the marker disks, and then using the marker disks to enable streamlined verification of multiple masters.

4-3-1: Create Marker Disks

Marker disks have a unique recording on track 0 which the 8000ST recognizes during CopyStream. When the 8000ST encounters a marker disk during a stream job, it immediately ejects it into the accept hopper and treats the next diskette in the input hopper as a master.

Marker disks cannot be read or copied by the 8000ST or any other professional duplication system. If a marker disk is inserted during any operation other than CopyStream, it will be rejected.

NOTE
Because marker disks are written with a strong write current, they should not be used for any other purpose.

Trace strongly recommends that you use distinctive diskettes (such as brightly colored diskettes) as marker disks, so that you can easily identify the marker disks at your site and in the accept hopper.

4-3: Stream Compare—continued

To create marker disks, follow these instructions:

1. Place any number of brightly colored blank diskettes in the input hopper. You will need one marker disk for every master in your stream job.

2. From the startup screen, press the **OPTION** button on the front panel. Press the softkeys labeled [Setup], [System], and then [Init].

3. Use the -more- softkey to display additional options. Press the softkey labeled MARKERS.

4. Press CONTINUE to begin making marker disks. The marker disks will be placed in the accept hopper. To stop making marker disks, press the **CLR/STOP** button or wait for the input hopper to be empty and press the QUIT softkey.

4-3-2: Compare

In order to stream compare multiple masters, you need one marker disk for every master diskette in your job. If you have not made enough marker disks, refer back to Subsection 4-3-1.

To stream compare multiple masters, follow these instructions:

1. If the system is not turned on, power up the system according to the instructions in Section 2-2. You should be viewing the 8000ST startup screen.

2. Place a marker disk in the input hopper. Place your first master diskette on top of the marker disk.

4-3: Stream Compare—continued

> **NOTE**
> You must place a marker disk before each master diskette in order to successfully stream compare.

3. Place the duplicated diskettes which you want to verify in the input hopper on top of the master they should match.

4. Place another marker disk on top of the diskettes already in the hopper. Then place another master diskette in the hopper, and place the diskettes to be compared against that master on top of the master diskette.

5. Repeat step 4 for all master diskettes you want to compare.

6. Press **COMPARE**. The system will display the compare options, as shown below. (If a hard disk is installed, the fourth softkey will be labeled SELECT.)

```
      Compare against a Master Disk
PREVIOUS      NEW       [Batch]
```

7. Press the softkey labeled [Batch]. Press STREAM to begin the stream compare job.

   The 8000ST ejects the first marker disk, reads in the first master diskette, and verifies that all the copies following that diskette are the same until the next marker disk. The 8000ST then reads the master diskette after the second marker disk and verifies it against all the diskettes following it, until all the diskettes are compared or the job is canceled.

4-3: Stream Compare—continued

8. To stop the compare job at any time, press the **CLR/STOP** key on the front panel. Pressing the **CLR/STOP** key once instructs the system to stop verification after finishing the current diskette. Pressing the **CLR/STOP** key twice stops the system immediately, and the current diskette is rejected.

9. Marker disks, masters, and accepted diskettes will be placed in the accept hopper, on the front of the 8000ST. Any rejected diskettes will be in the reject drawer, under the accept hopper. Jammed diskettes are also placed in the reject drawer, but are not counted as failed diskettes.

The system will proceed until the input hopper is empty. If any errors occur, refer to Chapter 8: Troubleshooting.

CHAPTER 5
HARD DISK

This chapter describes use of the optional hard disk. The hard disk is installed inside the 8000ST case (Refer to Figure 2.6 in Section 2-3 for system orientation). Master images can be stored on the hard disk, and then copied or compared directly from the hard disk, without using a master diskette. Images are stored in a single directory with no subdirectories.

The first section of this chapter contains instructions on how to store images on the hard disk, and how to use those images as the current master for duplication or verification. The second section describes maintenance and diagnostic functions for the hard disk. These functions include renaming and deleting files, erasing and formatting the hard disk, and scanning the hard disk for errors.

This chapter contains the following sections:

- Master Storage
- Maintenance and Diagnostics

Section 5-1: Master Storage

The primary advantage of having a hard disk in the 8000ST is that you can store multiple master images in the system, name those master images, and store the master images even after the system is powered down. The table below shows examples of how many master images of various formats you can expect to store on an 80 MB hard disk.

Master images take up more space than the actual diskette size, because of the format information which must be stored with the data. Master images which are in an MFM format take up less space on the hard disk, because they are automatically stored in a compressed format.

Format	Average Image Size	# That Fit on 80 MB Disk
Amiga	1.1 MB	73
Macintosh	1.5 MB	53
MFM 1.44 MB	1.8 MB	44
NEC DOS	1.4 MB	57

This section describes how you can utilize your internal hard disk for the various duplication tasks, first by storing master images as files on the hard disk, and then by using those files instead of master diskettes to perform duplication or verification. It also describes the ReadSet/CopySet feature, which allows you to group master images as a set, and use that set to create single, collated sets of diskettes.

The information in this section is divided into three subjects:

- Load Master or Load Set to Hard Disk
- Copy Master from Hard Disk
- Compare against Master on Hard Disk
- Copy or Compare Using CopySet

5-1: Master Storage—continued

5-1-1: Load Master or Load Set to Hard Disk

Loading a master is the first step in duplication or verification. Normally, when you copy or compare diskettes using the NEW command (See Section 3-1 or 4-1), loading the master is not a separate task, but a part of the copy or compare operation. Likewise, when you save the master image to the hard disk, you still have the option of proceeding directly to duplication after the master is loaded.

This section contains instructions for loading the master image to the internal hard disk, regardless of whether you wish to load only, or proceed to copy or compare against the master. In addition, this section describes the hard disk option of loading several master diskettes to be saved and duplicated as a single, collated set.

At the end of this subsection, there is a short explanation of how to enter text from the front panel of the 8000ST, in order to name master images.

Single Master

Loading a master image to the internal hard disk is exactly like copying or comparing a new master diskette (using the NEW feature, as described in Sections 3-1 and 4-1). The only difference is that before beginning duplication or verification, you enter a file name for the master image.

To load a master diskette to the internal hard disk with or without performing a copy or compare operation, follow these instructions:

1. If the system is not turned on, power up the system according to the instructions in Section 2-2. You should be viewing the 8000ST startup screen.

5-1: Master Storage—continued

2. Place the master diskette in the input hopper. If you wish to copy or compare against the master, place the blank diskettes or duplicated diskettes on top of the master diskette in the input hopper and in the input hoppers of eligible slave units.

3. Press **COPY** or **COMPARE**. The system will display the copy (or compare) options, as shown below. As a shortcut, you may press **COPY** or **COMPARE** twice. This will automatically select the NEW option.

```
Copy a Product Image
 PREVIOUS     NEW      [Batch]     SELECT
```

4. To load the master onto the hard disk, press the NEW softkey. The system will prompt you to name the master image file. If you press the ACCEPT softkey now, the 8000ST will read the master diskette, but will not save the master image on the hard disk.

```
Save file as: <not saved>
   [↓]        [↑]                ACCEPT
```

Enter a file name (10 characters maximum) using the up and down arrow softkeys to select each letter, and the right arrow (→, visible only after a letter has been selected) to move to the next character. Enter digits using the number keys. Refer to the instructions at the end of this subsection for information on entering text. When you are finished entering the name, press the softkey labeled ACCEPT.

5-1: Master Storage—continued

5. The system will begin reading the master diskette and creating a master image file on the hard disk. While the master is being read, the LCD displays the format (if it recognizes the format), or the size, density, and encoding type of an unrecognized format. A networked 8000ST will search for all systems which are available to share the copy or compare job.

6. After the master image is loaded, press the QUIT softkey on the master system's front panel to stop the job. To proceed with the copy or compare operation, press CONTINUE on the master system. Refer to Section 3-1 or 4-1 for more information on the copy and compare operations.

7. The system displays a COPY JOB CANCELLED message box. Press **CLR/STOP** to return to the startup screen.

8. If any errors occur, refer to Chapter 8: Troubleshooting.

Set Read-In

When your system is equipped with an internal hard disk, the ReadSet/ CopySet feature offers you the option of reading in several masters of the same format to be stored as a set. The image set can then be used to quickly duplicate diskette packages. Each set can contain up to 99 masters, depending on the amount of space available on the hard disk to store the master images.

5-1: Master Storage—continued

The master images in a set are assigned related names by the system, and are permanently linked on the hard disk. When you change the name of one of the images (as described in Subsection 5-2-1), the system changes the name of every image in the set. You can only delete the master images as a set (See Subsection 5-2-1).

To load a set of master diskettes, follow these instructions:

1. If the system is not turned on, power up the system according to the instructions in Section 2-2. You should be viewing the 8000ST startup screen.

2. Place all the master diskettes in the input hopper. All the master diskettes must be the same format.

3. Press the **COPY** button on the front panel.

4. Press the softkey labeled `[Batch]`. From the `[Batch]` menu, choose the softkey labeled `READ SET`.

5. The system will prompt you to enter a base name for the set. The base name will be assigned to each master, with an additional suffix: **-01**, **-02**, **-03**, and so on. For example, if you name the set **STAMPY** and load three master diskettes, the files on the hard disk will be named STAMPY-01, STAMPY-02, and STAMPY-03.

```
Save file as: "A        "
   [↓]        [↑]                    [→]
```

5-1: Master Storage—continued

6. Enter a set name (7 characters maximum) using the up and down arrow softkeys to select each letter, and the right arrow (→) to move to the next character. Refer to the instructions at the end of this subsection for information on entering text. When you are finished entering the name, press the softkey labeled ACCEPT.

7. The system will begin reading the master diskettes and creating master image files on the hard disk. While each master is being read, the LCD displays the format of the set (if it recognizes the format), or the size, density, and encoding type of an unrecognized format.

8. A final status screen tells you how many masters passed read-in. Masters which are read in successfully are placed in the accept hopper on the front of the 8000ST. If any masters fail read-in, the read-in is canceled, and the whole set must be deleted and read in again.

If the read-in was successful, all the master images are now stored in separate files on the hard disk. Refer to Subsection 5-1-4 for information on copying or comparing collated sets. For information on renaming the set, refer to Subsection 5-2-1.

5-1: Master Storage—continued

Entering Text

Whether you load a single master or a set, you need to enter a name. You also need to enter a name if you rename a file on the hard disk, as described in Subsection 5-2-1. When the 8000ST prompts for a file name, the softkeys are labeled with a variety of arrows. Pressing an up or down arrow softkey places the system in text entering mode, with a screen similar to this:

```
Save file as: "A          "
  [↓]       [↑]       [←]       [→]
```

Select a character by using the up and down arrow softkeys to scroll through the available set of characters, shown below:

A B C D E F G H I J K L M N O P Q R S T U V W X Y Z
$ - . _ Ø 1 2 3 4 5 6 7 8 9

(The digits 0–9 can also be entered using the number keys on the keypad.)

When you reach the character you want, use the right arrow softkey (→) to accept the character and move the cursor to the next available space. The label on the fourth softkey will change to ACCEPT. Press the ACCEPT softkey to enter the name as it appears on the display, or press the up or down arrow keys to begin entering another character. You may enter up to 10 characters for most file names.

To erase characters, move back over them using the left arrow softkey (←). Moving the cursor back past the first character brings you back to the previous prompt.

If you attempt to use a name that is already assigned to a file on the hard disk, the 8000ST will issue an error message.

5-1: Master Storage—continued

5-1-2: Copy Master from Hard Disk

When you load masters to the internal hard disk as described in Subsection 5-1-1, master images are created and stored on the hard disk. Master images remain on the hard disk, even when the system is powered down, and can be used as the current master for copy or compare jobs.

To duplicate a master which is being stored on the internal hard disk, follow these instructions:

1. If the system is not turned on, power up the system according to the instructions in Section 2-2. You should be viewing the 8000ST startup screen.

2. Place any number of blank diskettes in the input hopper.

3. If you wish to specify an exact number of copies to make, enter the quantity now, using the numeric keys on the front panel keypad. If a quantity is entered, the 8000ST will stop copying once the specified quantity of diskettes are passed, and placed in the accept hopper.

4. Press **COPY**. The system will display the copy options, as shown below.

```
        Copy a Master Disk
PREVIOUS    NEW    [Batch]    SELECT
```

5. Press the SELECT softkey. The system will display the number of masters stored on the hard disk. Press the down arrow (↓) to begin scrolling through a list of all the master images available on the hard disk and their formats.

5-1: Master Storage—continued

```
File: PRODUCT1          (IBM 720K)
  EXIT        [↑]         [↓]        ACCEPT
```

6. Use the arrow softkeys (↑ and ↓) to scroll through the file names until you find the master image you wish to copy. Press the softkey labeled ACCEPT.

7. The system begins duplication and displays the status of the job in the following screen:

```
COPYING                 TRK:31        PASS:4
PRODUCT1                              FAIL:0
```

To stop the duplication job at any time, press the **CLR/STOP** key on the front panel. Pressing the **CLR/STOP** key once instructs the system to stop duplication after finishing the current diskette. Pressing the **CLR/STOP** key twice stops the system immediately, and the current diskette is rejected.

8. Accepted diskettes will be placed in the accept hopper, on the front of the 8000ST. Any rejected diskettes will be in the reject drawer, under the accept hopper. Jammed diskettes are also placed in the reject drawer, but are not counted as failed diskettes.

9. When the input hopper is empty, the system will prompt:

```
        INPUT HOPPER EMPTY
      CONTINUE    QUIT    MUTE
```

5-1: Master Storage—continued

If you wish to make more copies of the same master, place additional blank diskettes in the input hopper and press the CONTINUE softkey. If you are done, press the QUIT softkey. Use MUTE to mute the beeper without canceling or continuing the job.

10. If you choose QUIT or you abort the job, the system displays the final status of the job with the message box:

```
COPY JOB <PRODUCT1> CANCELLED
PASS:25    FAIL:2
```

Press **CLR/STOP** to return to the startup screen.

11. If any errors occur, refer to Chapter 8: Troubleshooting.

After you have duplicated a master from the hard disk, the master image is also stored in RAM until another master is loaded or until the system is powered down. That master image will now be used as the master if you choose the PREVIOUS function of the copy or compare menu (See Section 3-2 and 4-2).

5-1-3: Compare against Master on Hard Disk

When you load a master onto the internal hard disk as described in Subsection 5-1-1, a master image is created and stored on the hard disk. This master image remains on the hard disk, even when the system is powered down, and it can be used as the current master for copy or compare jobs.

To compare duplicated diskettes against a master which is being stored on the internal hard disk, follow these instructions:

5-1: Master Storage—continued

1. If the system is not turned on, power up the system according to the instructions in Section 2-2. You should be viewing the 8000ST startup screen.

2. Place any number of copies of the desired master in the input hopper.

3. If you wish to specify an exact number of diskettes to compare, enter the quantity now, using the numeric keys on the front panel keypad. If a quantity is entered, the 8000ST will stop comparing once the specified quantity of diskettes are passed, and placed in the accept hopper.

4. Press **COMPARE**. The system will display the compare options, as shown below.

```
Compare against a Master Disk
PREVIOUS    NEW    [Batch]    SELECT
```

5. Press the SELECT softkey. The system will display the number of masters stored on the hard disk. Press the down arrow (↓) to begin scrolling through a list of all the master images available on the hard disk and their formats.

```
File: PRODUCT1          (IBM 720K)
  EXIT        [↑]        [↓]        ACCEPT
```

6. Use the arrow softkeys (↑ and ↓) to scroll through the file names until you find the master image you wish to compare against. Press the softkey labeled ACCEPT.

5-1: Master Storage—continued

7. The system begins verification and displays the status of the job in the following screen:

```
COMPARING          TRK:31        PASS:4
PRODUCT1                         FAIL:0
```

To stop the compare job at any time, press the **CLR/STOP** key on the front panel. Pressing the **CLR/STOP** key once instructs the system to stop verification after finishing the current diskette. Pressing the **CLR/STOP** key twice stops the system immediately, and the current diskette is rejected.

8. Accepted diskettes will be placed in the accept hopper, on the front of the 8000ST. Any rejected diskettes will be in the reject drawer, under the accept hopper. Jammed diskettes are also placed in the reject drawer, but are not counted as failed diskettes.

9. When the input hopper is empty, the system will prompt:

```
INPUT HOPPER EMPTY
CONTINUE   QUIT   MUTE
```

If you wish to compare more duplicated diskettes against the same master, place additional diskettes in the input hopper and press the `CONTINUE` softkey. If you are done, press the `QUIT` softkey. Use `MUTE` to mute the beeper without canceling or continuing the job.

5-1: Master Storage—continued

10. If you choose QUIT or you abort the job, the system displays the final status of the job with the message box:

```
COMPARE JOB <PRODUCT1> CANCELLED
PASS:25      FAIL:2
```

Press **CLR/STOP** to return to the startup screen.

11. If any errors occur, refer to Chapter 8: Troubleshooting.

After you compare against a master which is stored on the hard disk, the master image is also stored in RAM until another master is loaded or until the system is powered down. That master image will now be used as the master if you choose the PREVIOUS function of the copy or compare menu (See Sections 3-2 and 4-2).

5-1-4: Copy or Compare Using CopySet

After you load a set of master images to the hard disk, as described in Subsection 5-1-1, you can use the CopySet feature to copy a set of collated diskettes from that master set. Collated diskettes are duplicated one set at a time, so that you can remove each set from the input hopper before the next set is duplicated, to avoid confusion.

> **NOTE**
> Do not use prelabeled diskettes for copying sets. If a diskette is rejected, the image will be copied to the next diskette in the input hopper.

To copy or compare against a set which is being stored on the internal hard disk, follow these instructions:

5-1: Master Storage—continued

1. If the system is not turned on, power up the system according to the instructions in Section 2-2. You should be viewing the 8000ST startup screen.

2. Place blank diskettes or diskettes to be compared in the input hopper. Make sure diskettes to be compared are in set order, with the copy of the first master on the bottom.

3. Press **COPY** (or **COMPARE**). Then press the softkey labeled [Batch].

4. Press the softkey labeled COPY SET (or COMP SET). The system will display the number of sets stored on the hard disk. Press the down arrow (↓) to begin scrolling through a list of all the sets available on the hard disk, their formats, and the number of masters in each set.

```
Set: STAMPY-        07 disks     (IBM 720K)
                [↑]        [↓]        ACCEPT
```

5. Use the arrow softkeys (↑ and ↓) to scroll through the base names of the sets until you find the set you wish to copy or compare against. Press the softkey labeled ACCEPT. The system will begin the copy or compare job.

6. If a diskette is rejected during copy, that image will be copied to the next diskette in the input hopper.

   A reject during compare is more serious than a copy reject, because it means the whole diskette set is bad. The system will prompt the user to cancel the compare job after one diskette fails. Press QUIT to cancel the job, press CONTINUE to verify the remaining diskettes. If a diskette is rejected due to a jam, try comparing the whole set again.

5-1: Master Storage—continued

7. When the CopySet job is complete, the system will prompt:

```
CopySet job completed. Copy another set?
        CONTINUE     QUIT
```

If you wish to copy or compare another set, place the diskettes in the input hopper and press the CONTINUE softkey. If you are done, press the QUIT softkey. Press **CLR/STOP** to return to the startup screen.

8. If any errors occur, refer to Chapter 8: Troubleshooting.

Section 5-2: Maintenance and Diagnostics

This section contains instructions for maintaining the files on your internal hard disk. It also describes some advanced maintenance and diagnostic functions which Trace Customer Support might ask you to use.

5-2-1: File Maintenance

If your system has an internal hard disk, you might occasionally want to rename or delete the files which are stored on the hard disk. Or, you may just want to view a list of all the files on the hard disk and the amount of space available. This section describes how to view, rename, and delete files on the hard disk.

View

Follow these instructions to view a list of all the files currently stored in the single directory of the hard disk. The system will also display the amount of free space remaining on the hard disk.

1. From the 8000ST startup screen, press **OPTION**.

2. Press the softkey which is labeled `[Harddisk]`. From the `[Harddisk]` menu, choose the softkey labeled `VIEW`.

3. The system will display the number of files stored on the hard disk and the space remaining.

```
    21 Files,  22.47 Mbytes Free.
  EXIT                  [↓]
```

4. Press the down arrow (↓) to begin viewing files.

```
File: PRODUCT1            (IBM 720K)
  EXIT        [↑]        [↓]        ACCEPT
```

5-2: Maintenance and Diagnostics—continued

5. Use the arrow softkeys (↑ and ↓) to scroll through the file names. When you are done viewing the list, press the softkey labeled EXIT. The system will return you to the [Harddisk] menu without taking any actions.

6. Press **CLR/STOP** to return to the startup screen.

Rename

The rename function allows you to choose a file from the hard disk and assign a new name to it. You can also rename a set by renaming any master in that set (See Subsection 5-1-1). Follow these instructions to rename a file on the hard disk.

1. From the 8000ST startup screen, press **OPTION**.

2. Press the softkey labeled [Harddisk]. From the [Harddisk] menu, choose the softkey labeled RENAME.

3. The system will display the number of masters stored on the hard disk. Press the down arrow (↓) to begin scrolling through a list of all the files on the hard disk.

```
File: PRODUCT1              (IBM 720K)
   EXIT          [↑]          [↓]          ACCEPT
```

4. To exit without making any changes, press the softkey labeled EXIT.

5. To rename a file or set, use the arrow softkeys (↑ and ↓) to scroll through the file names until you find the file you wish to rename. Press the softkey labeled ACCEPT. The system will display the old file name, and prompt you with a flashing underscore to enter a new name for the file.

5-2: Maintenance and Diagnostics—continued

```
Enter file name: "A          "
   [↓]        [↑]                [→]
```

6. Enter a file name (10 characters maximum) or a set name (7 characters maximum) using the arrow softkeys to select each letter, and the right arrow (→) to move to the next character. Refer to Subsection 5-1-1 for information on entering text. When you are finished entering the name, press the softkey labeled ACCEPT. The system will rename the file or the entire set and return you to the [Harddisk] menu.

7. Press **CLR/STOP** to return to the startup screen.

Delete

Use these instructions to permanently delete a file or an entire set from the internal hard disk:

> **NOTE**
> Be sure to copy the master image to a floppy diskette before deleting it from the hard disk if you think you may need the image again. There is no way to retrieve a deleted file.

1. From the 8000ST startup screen, press **OPTION**.

2. Press the softkey which is labeled [Harddisk]. From the [Harddisk] menu, choose the softkey labeled DELETE.

3. The system will display the number of masters stored on the hard disk. Press the down arrow (↓) to begin scrolling through a list of all the files on the hard disk.

5-2: Maintenance and Diagnostics—continued

```
File: PRODUCT1          (IBM 720K)
  EXIT        [↑]         [↓]        ACCEPT
```

4. Use the arrow softkeys (↑ and ↓) to scroll through the file names until you find the file you wish to delete. Press the softkey labeled ACCEPT. The system will permanently delete the file **without confirmation** and return you to the [Harddisk] menu. If you delete any master from a set, the entire set will be deleted (See Subsection 5-1-1). To exit without deleting any files, press EXIT.

5. Press **CLR/STOP** to return to the startup screen.

5-2-2: Advanced Functions

The information in this section is provided to help advanced users maintain and troubleshoot the 8000ST hard disk. Trace Customer Support may also ask you to refer to this information. This section covers formatting the hard disk, setting the system software to recognize or ignore the hard disk, and scanning the disk for defects.

These procedures are not normally required for ordinary operation. They are more likely to be used when you install or remove your hard disk, or if you are experiencing hard disk errors. If you are unsure about whether to use these procedures, contact Trace Customer Support for guidance.

Disable/Enable Disk

Under certain circumstances you may want to disable the hard disk feature so that the system does not always request a file name. Or you may have a hard disk installed which the system is not recognizing, in which case you need to enable the hard disk feature.

5-2: Maintenance and Diagnostics—continued

1. From the startup screen, press the **OPTION** button on the front panel.

2. From the option menu, press the [Setup] softkey. Then move through the menu structure by pressing the [System] softkey, then [Init], and finally [Harddisk].

3. Press the softkey labeled DISABLE (or ENABLE, depending on the current status of the hard disk feature). The system will immediately disable (or enable) the hard disk. The [Harddisk] menu will change to reflect the status of the hard disk.

4. Use the **CLR/STOP** key to return to the startup screen.

If this is the first time you are enabling a new hard disk to run with the 8000ST, you need to initialize the hard disk, as described below.

Initialize Disk

Follow this procedure if you wish to format a new hard disk or completely erase and reinitialize a hard disk. If your hard disk was installed at the Trace factory, it is already formatted when you receive the 8000ST.

> **WARNING**
> This operation will permanently destroy all files and information stored on the 8000ST hard disk.

1. From the 8000ST startup screen, press **OPTION**.

2. From the option menu, press the [Setup] softkey. Then move through the menu structure by pressing the [System] softkey, then [Init], and finally [Harddisk].

5-2: Maintenance and Diagnostics—continued

3. Press the softkey labeled INIT. The system warns you that all files on the hard disk will be destroyed.

4. Press the softkey labeled CONTINUE to erase and format the hard disk, or press the key labeled QUIT to cancel the procedure.

5. When the hard disk has been formatted, the system prompts:

```
Hard disk is initialized.
Press any key to continue.
```

   Press any key to continue 8000ST operation.

After initializing a hard disk, you may want to run the hard disk diagnostics to check the integrity of the hard disk. The diagnostics are described below.

Hard Disk Diagnostics

The hard disk diagnostics are used to identify bad sectors on the internal hard disk. Trace Customer Support may ask you to run these diagnostics and report the results, in order to help you troubleshoot possible hard disk errors or data corruption.

1. From the startup screen, press the **OPTION** button.

2. From the option menu, press the [Setup] softkey. Then move through the menu structure by pressing the [System] softkey, then [Init], and finally [Harddisk]. Press the softkey labeled SCAN.

5-2: Maintenance and Diagnostics—continued

3. The system scans the hard disk and reports the results on the LCD. For help interpreting the results of the scan, contact Trace Customer Support.

CHAPTER 6
QUALITY CONTROL FEATURES

The 8000ST offers a variety of advanced quality control features. These features allow you to optimize your duplication process.

The first two sections of this chapter describe user definable parameters that help determine whether diskettes pass or fail. The data placement parameters (window and dropout) and retry counts are already configured to provide optimum performance for most duplication needs, but they can be adjusted to meet specific needs.

This chapter also describes several automatic tests, including automatic asymmetry compensation, and the TraceBack information track, which stores information about the duplication environment on every duplicated diskette.

This chapter is divided into the following sections:

- Data Placement
- Retry Limits
- Automatic Tests and Adjustments
- TraceBack Track Data
- Precompensation Optimization

Section 6-1: Data Placement

The data placement parameters allow you to adjust the width of the acceptable window for bit placement during format (copy) and compare jobs and set the acceptable threshold for missing pulse (MPC), or dropout, detection. The 8000ST offers five levels for each of these quality parameters, labeled A–E. Level A is the most stringent quality level (the smallest window or the highest threshold).

To ensure maximum readability of your diskettes across a variety of target machines, Trace recommends using the default window and threshold settings of Level C. Setting the levels higher could result in acceptable diskettes being rejected, while setting the levels too low or turning the tests off could allow marginal diskettes to be accepted as good diskettes.

The exact window settings and dropout thresholds which correspond to Levels A–E vary depending on the format you are duplicating. Tables B and C below show the actual window measurement and dropout threshold represented by Levels A–E for each standard 8000ST format.

Table B: Window Settings

	Copy Windows (in % of total bitcell)					Compare Windows (in % of total bitcell)				
Format	**A**	**B**	**C**	**D**	**E**	**A**	**B**	**C**	**D**	**E**
Apple II GCR	30	35	40	45	50	35	40	45	50	55
C-64 GCR	30	35	40	45	50	35	40	45	50	55
Mac 1.44 MB	50	60	70	80	90	60	70	80	90	100
Mac GCR	35	40	45	50	55	40	45	50	55	60
MFM 360K	40	50	60	70	80	45	55	65	75	85
MFM 720K	40	50	60	70	80	45	55	65	75	85
MFM 1.2 MB	50	59	67	75	84	59	67	75	84	92
MFM 1.44 MB	50	60	70	80	90	60	70	80	90	100
MFM 2.88 MB	50	60	70	80	90	60	70	80	90	100
NEC J-3100	50	59	67	75	84	59	67	75	84	92
NEC 9801	50	59	67	75	84	59	67	75	84	92

6-1: Data Placement—continued

Table C: Dropout Threshold Settings

	Copy Thresholds (in % of previous track TAA)					Compare Thresholds (in % of previous track TAA)				
Format	**A**	**B**	**C**	**D**	**E**	**A**	**B**	**C**	**D**	**E**
All	60	50	40	30	20	55	45	35	25	15

To view or change the data placement settings, follow these steps:

1. From the startup screen, press the **OPTION** key.

2. Choose [Setup], then [Params] from the softkey menus. Press the softkey labeled QUALITY. The LCD will display a scrolling screen and will prompt for the first of the four quality settings:

```
Copy window
Compare window
Copy threshold
Compare threshold
```

```
Copy window: Level C (default)
   [↑]        [↓]                ACCEPT
```

3. Use the up or down arrow softkey to scroll through the available quality settings. You can choose Level A–E, or select OFF to not run the specified test.

4. Press the ACCEPT softkey to save any changes and proceed to the next quality setting. After you accept the value for the fourth setting, you will be returned to the [Params] menu.

Section 6-2: Retry Limits

The retry limits allow you to specify how many times the 8000ST will attempt to rewrite or reread a failed track before failing the diskette during copy and compare jobs. For each type of job, you can specify the number of retries per track, and the total number of retried tracks permitted on a single diskette.

To view or change the retry limits, follow these instructions:

1. From the startup screen, press the **OPTION** key.

2. Choose [Setup], then [Params] from the softkey menus. Press the softkey labeled RETRIES. The LCD will display a data entry screen and will prompt for the first of the four retry limits:

```
Copy Retries/Track [1]: _
  [←]      [→]      DEFAULT    ACCEPT
```

3. The top line indicates one of the four retry settings:

```
Copy Retries/Track
Copy Retried Tracks/Disk
Compare Retries/Track
Compare Retried Tracks/Disk
```

   The number in square brackets indicates the current limit. On the per disk retries, a zero (Ø) indicates that there is no limit to the number of retried tracks per diskette.

4. Use the numeric keys to enter a retry value, or press the softkey labeled DEFAULT to enter the Trace recommended default (1 retry per track, no limit per diskette). To backspace, use the left arrow softkey (←).

6-2: Retry Limits—continued

5. Press the ACCEPT softkey to save any changes and proceed to the next retry setting. After you accept the value for the fourth setting, you will be returned to the [Params] menu.

Section 6-3: Automatic Tests and Adjustments

This section describes several tests which the 8000ST runs automatically to improve the overall quality of your duplicated diskettes. For tests which can be turned off or changed, instructions are provided.

- Automatic Asymmetry Adjustment
- In-Process Head Degaussing
- In-Process Chucking Detection
- Instantaneous Speed Variation Detection
- Minimum Track Amplitude

6-3-1: Automatic Asymmetry Adjustment

The 8000ST automatically measures drive head asymmetry during normal operation. Based on this measurement, the 8000ST automatically adjusts the write current to compensate for the effects of head wear.

By default, the measurement and compensation is performed every 2,500 diskettes, but this interval may be altered. To change the frequency of automatic asymmetry adjustment, follow these instructions:

1. From the startup screen, press the **OPTION** button on the front panel.
2. Press the softkeys labeled `[Setup]`, `[System]`, `[Init]`, and then `[Drive]`.

6-3: Automatic Tests and Adjustments—continued

3. Press the softkey labeled [Limits]. Finally, press AUTOASYM.

4. Use the number keys on the front panel to enter a new value for the number of diskettes duplicated between automatic asymmetry tests. Press the ACCEPT softkey to save the value and exit the edit screen.

6-3-2: In-Process Head Degaussing

The 8000ST automatically degausses the drive head after each duplicated diskette is ejected. No operator action is required to enable this feature.

Permanent head magnetization (as opposed to the magnetic flux which writes data) can degrade bit spacing during duplication, and in severe cases can even degrade the amplitude of a recorded track during verification. Head magnetization can be caused by exposure of the head to strong magnetic fields or to extremes of electrical current, but more commonly accumulates gradually during routine read/write operations. Left uncorrected, this bias can seriously degrade the window margins of copies made on that drive.

The 8000ST uses several bursts of write current to remove residual magnetic bias in the head core. This "degaussing" process, which takes only a few milliseconds, is executed during the autoloader eject cycle after each duplicated diskette is completed. Because the degauss routine is executed only after the diskette is sensed as having fully left the drive, there is never any threat of a jammed diskette being damaged.

This feature, together with the 8000ST's automatic asymmetry adjustment (described above), will keep drive modules functioning at optimum performance.

6-3: Automatic Tests and Adjustments—continued

6-3-3: In-Process Chucking Detection

The 8000ST gives you the option of performing In-Process Chucking Detection (ICD). Over the life of a drive, the chucking pin which holds the diskette in place in the drive may begin to wear. In some cases, the pin may clamp, or chuck, incorrectly against the diskette at first before finding the right location.

With ICD, the 8000ST performs two tests to catch mischucking problems. Both tests are performed after duplication has been completed and the drive head has returned to track 0. Since the drive head is already returning to track 0 for the next diskette, these tests add only about 200 milliseconds to the duplication time of each diskette.

In the first test, the 8000ST measures the timing from drive index to the first ID address mark encountered. If the timing is greater or less than the user-defined tolerance for index-to-mark timing, the diskette is rejected.

In the second test, First Track Reverify, track 0 is reverified to further ensure that the diskette did not mischuck in the drive during the cycle. If the diskette mischucked and shifted during formatting, the first track will not be aligned correctly, and the diskette is rejected.

ICD is disabled when you receive your system. Follow these steps to enable (or disable) ICD and set the index-to-mark tolerance:

1. From the startup screen, press the **OPTION** button.

2. Press the softkeys labeled `[Setup]`, `[Params]`, `[Advanced]`, and finally `ICD`. The system will display a scrolling screen to allow you to disable ICD.

```
In-Process Chucking Detection: DISABLE
           [↑]        [↓]       ACCEPT
```

6-3: Automatic Tests and Adjustments—continued

3. Use the up or down arrow softkeys to scroll to ENABLE or DISABLE. Press the softkey labeled ACCEPT. Selecting DISABLE returns you to the [Options] menu.

4. Selecting ENABLE displays the ICD tolerance screen. This screen allows you to enter the copy and compare tolerances (in microseconds) for the timing between index and the ID address mark. If the index-to-mark timing occurs sooner or later from ideal than the tolerance allows, the diskette is rejected (the smaller the number, the more critical the test).

```
Copy ICD Tolerance in µs [26]: 26
 [←]        [→]        DEFAULT      ACCEPT
```

The number in brackets indicates the current ICD tolerance for copy operations. Use the numeric keys to enter a new tolerance, or press DEFAULT to use the recommended setting. To backspace, use the left arrow softkey (←).

> **NOTE**
> Setting the tolerance lower than the Trace default could result in acceptable diskettes being rejected.

5. Press the ACCEPT softkey to save any changes and proceed to the compare tolerance setting. After you accept the compare setting, you will be returned to the [Options] menu.

The ICD setting will remain in effect (even if you turn off the system) until you change it again using this procedure. The tolerances you enter will apply only to drives of the same speed as the currently installed drive (for example, all 1200 RPM drives). If you install a drive of another speed, the default tolerances will apply unless you change them using this procedure.

6-3: Automatic Tests and Adjustments—continued

6-3-4: Instantaneous Speed Variation Detection

The Instantaneous Speed Variation (ISV) test periodically measures the speed of the drive motor to ensure that any fluctuation falls within a user defined tolerance. To enable the ISV test and set the tolerance, follow these instructions:

1. From the startup screen, press the **OPTION** button.

2. Press the softkeys labeled [Setup], [Params], [Advanced], and finally ISV. Use the up or down arrow softkeys to scroll to ENABLE (or DISABLE) and press ACCEPT.

```
ISV Detection for Sony4ZB: DISABLE
          [↑]        [↓]        ACCEPT
```

3. If you enable the ISV test, the system displays another screen which allows you to enter the acceptable drive speed fluctuation in percentage of proper drive speed. Use the numeric keys to enter a new tolerance, or press the softkey labeled DEFAULT to use the recommended setting. To backspace, use the left arrow softkey (←).

```
ISV Tolerance in percent [1.5]: 1.5
 [←]      [→]      DEFAULT      ACCEPT
```

Press the ACCEPT softkey to save any changes and return to the [Options] menu.

6-3: Automatic Tests and Adjustments—continued

6-3-5: Minimum Track Amplitude

The MPC test, described in Section 6-1, detects and rewrites tracks with weak data pulses. In this test, a weak pulse is defined as one which falls below a stated percentage of the previous track's average amplitude. Therefore, a track with weak data pulses will pass if the previous track had a low average amplitude, but the diskette still may fail in the field.

The Minimum Track Amplitude (MTA) test supplements the MPC test by allowing you to state an absolute minimum amplitude for all data. If any pulses on a track fall below this amplitude, the track will fail. To enable the MTA test and define a minimum amplitude:

1. From the startup screen, press the **OPTION** button.

2. Press [Setup], [Params], [Advanced], and finally MTA. Use the arrow softkeys to scroll to ENABLE (or DISABLE) and press ACCEPT.

```
MTA Detection: DISABLE
          [↑]        [↓]        ACCEPT
```

3. If you enable the MTA test, the system displays a screen which allows you to set the absolute minimum track amplitude. Use the numeric keys to enter a minimum amplitude, or press DEFAULT to use the recommended setting. To backspace, use the left arrow softkey (←).

```
Min Trk Average in Volts [0.50]: 0.50
 [←]       [→]       DEFAULT      ACCEPT
```

Press ACCEPT to save any changes and return to the [Options] menu.

Section 6-4: TraceBack Track Data

TraceBack is a software feature which automatically places specific information regarding the diskette production environment and duplication parameters onto each duplicated diskette. The information identifies the equipment and conditions used to produce the diskette.

The TraceBack information is stored on an MFM-encoded track just outside the normal data track area (track 80). The information is stored on both sides of the diskette, except when the diskette is duplicated as a single-sided product. TraceBack cannot be turned off.

All information on the TraceBack track is gathered by the 8000ST automatically. Some of the data is collected from user definable fields. In particular, the timestamp is determined from the system clock, which must be set by the user (See Subsection 6-4-1).

The information recorded includes:

- user defined quality settings such as window margin, retry counts, missing bit threshold, precompensation, and write current
- date and time the diskette was produced
- serial numbers of the drive and system where the diskette was produced

TraceBack information does not interfere with the format specifications of the duplicated diskettes. The normal data area on each diskette still conforms exactly to format specifications.

This section contains instructions for setting the time and date on the system clock, covers the various methods for retrieving TraceBack data, and describes the exact syntax of the data on the TraceBack track, for users who want to develop their own data retrieval programs.

6-4: TraceBack Track Data—continued

6-4-1: Setting the System Clock

In order for the 8000ST to record the exact time and date of production on the TraceBack track, the system clock must be accurate. Once you set the system clock, the system will remember the clock setting through power cycles. To set or change the system clock, follow these instructions:

1. From the startup screen, press the **OPTION** key.

2. Choose [Setup], [System], [User], and finally DATE/TIME. The LCD will display the date field first:

```
Enter date:  03-25-93
  [←]      [→]      PREV      NEXT
```

3. The date is shown in three fields (separated by hyphens), in the order month-day-year. The example above shows the date March 25, 1993.

4. Use the number keys on the front panel to enter digits for each field. The arrow softkeys (← and →) move the cursor backward and forward through the individual digits. NEXT moves the cursor to the next field, while PREV moves it back to the previous field.

5. When the date is entered correctly, move the cursor to the rightmost field and press the NEXT softkey. The rightmost softkey will change to ACCEPT. Press the ACCEPT softkey.

6. Now the system will display a 24-hour clock. The fields are hours:minutes:seconds. Repeat steps 4 and 5 to enter the time. Press the ACCEPT softkey to move to the day field.

6-4: TraceBack Track Data—continued

7. Use the arrow softkeys to scroll through the days of the week or enter a day using the number keys (1 = Sunday). When you press ACCEPT, you will return to the [User] menu.

6-4-2: Retrieving Data

There are several methods of retrieving the information which is stored on the TraceBack track. The following options are summarized in this section:

- A Series 1000/2000/3000 system with TraceBack installed
- A terminal attached to the 8000ST's serial port
- Commercial test equipment, such as the Trace MT100
- A PC utility

You can attach a terminal or terminal emulator to the SERIAL 2 port on the back of the 8000ST using a 9-to-25-pin cable. Configure the terminal for 9600 baud (BPS), no parity, 8 data bits, 1 stop bit. (A Series 1000/2000/3000 terminal is already configured correctly for this application.) Place a duplicated diskette in the input hopper and select the TBTRACK option under the [Utility] menu in the **OPTION** tree. The information will be displayed on the terminal.

You can also retrieve several of the data fields using certain test equipment, such as the Trace MT100 or the AME analyzer. For more information on using test equipment to read the TraceBack track, contact Trace Customer Support.

6-4: TraceBack Track Data—continued

Because the TraceBack track has a standard IBM 2 KB sector, the track can also be read by any PC with an appropriate software utility and the ability to step the drive beyond the normal data range. Refer to Subsection 6-4-3 for information on writing your own PC utility.

The entire TraceBack track can be read by the mtread utility on a Trace Series 1000, 2000, or 3000 system which has the TraceBack option installed. Follow these instructions:

1. Put the diskette you wish to examine into a Tracer autoloader which has the correct drive type installed and is online.

2. At the UNIX prompt, type **mtread *n*** (where *n* is the station number). The system will read the disk and then display the TraceBack information on the screen (See sample information in Figure 6.2). Refer to Section 6-4-3 for definitions of the fields.

```
TraceBack™
OPER= NOT RECORDED
STATION= 049310426
WORKORDER= NOT RECORDED
SYSTEM= V 1.2.3
PRODUCT= <unnamed>
MEDIA TYPE= <default>
WINDOW= C,70%,C,80%
TAA= NOT USED
THRESHOLD= C,40%,C,35%
RETRIES= 3,20
PRE/WRC= [lengthy precompensation and write current table for this
format]
DRIVESN= 11240024
LOADERSN= 049310426
USTRING= NOT RECORDED
TSTRING= TraceBack (tm) Copyright (c) 1992 Trace Mountain Products
Inc., ALL RIGHTS RESERVED
DUP TIME= Tue Jan 05 14:01:13 1993
DISK#/JOB#= 003/099
SN= NOT SERIALIZED
```

Figure 6.2: Sample mtread Information

6-4: TraceBack Track Data—continued

6-4-3: Creating a Data Retrieval Utility

Because the format of the information track is standardized, users may want to develop their own programs on other types of equipment to retrieve and utilize the TraceBack information.

This section describes the syntax of the information TraceBack saves. It also contains the list of the keywords TraceBack uses to describe all the features you can choose to record.

The data entries are placed one after another on the TraceBack track. The last entry will be **$$** (in other words, the keyword is '$'). The general format of each entry on the TraceBack track is as follows:

$[keyword] = [value]

where: **[keyword]** is one of the labels in the table below
[value] is a null terminated ASCII string

The table below lists all the keywords available on TraceBack. The value will indicate NOT RECORDED or NOT USED for fields which are not currently used. When no value is available, the keyword will be omitted from the TraceBack track.

6-4: TraceBack Track Data—continued

Keyword	Description and Syntax
TRACEBACK	Trademark symbol (tm)
OPER	Not currently used
STATION	Serial number of the system which produced the diskette
WORKORDER	Not currently used
SYSTEM	Revision level of the firmware in the system which produced the diskette
PRODUCT	The image file name from the hard disk or **<unnamed>**
PTIME	Timestamp of image file from hard disk, if available
DESCRIP	Format description, if available
MEDIA TYPE	Name of the media type profile used (usually **<default>**)
WINDOW	Copy and compare window margin settings in letter grade and equivalent percentage, separated by commas
TAA	Not currently used
THRESHOLD	Copy and compare missing bit threshold settings in letter grade and percentage, separated by commas
RETRIES	Write retries followed by cumulative retries, separated by a comma
MTTIME	Timestamp of media type profile, if available (usually **NOT RECORDED**)
PRE/WRC	Precompensation (in nS) and write current (in mA) table from the media type profile or the system default
DRIVESN	Chassis serial number of the drive which produced the diskette
LOADERSN	Same as $STATION
TSTRING	Trace defined string: TraceBack (tm) Copyright (c) 1992 Trace Mountain Products Inc., ALL RIGHTS RESERVED
DUP TIME	Date and time when diskette was produced, in the format WWW MMM DD hh:mm:ss YYYY (for example, Mon Jan 25 13:04:45 1993)
DISK#/JOB#	Diskette position in total job in the format *xxx/yyy*
SN	Not currently used; value will be **NOT SERIALIZED**
$	End of data

Section 6-5: Precompensation Optimization

The [MediaTyp] feature of the 8000ST allows users with advanced knowledge of media formats to optimize precompensation and write current tables for individual media lots by modifying the system setup file. The modified setup file is then loaded into the 8000ST.

> **WARNING**
> Advanced knowledge and training is required to correctly modify precompensation and write current. Altering these settings incorrectly can dramatically decrease the performance of your system.

Contact Trace for information on the Windows STSetup program for creating modified setup files. Trace also offers an advanced 8000ST course which provides the knowledge necessary to correctly modify precompensation and write current.

In addition, the Trace MT100 is capable of automatically optimizing 8000ST setup files for some drive types based on a sample of media produced by the 8000ST drive. Because the changes are made automatically, there is a reduced chance of user error. For information on using the MT100, refer to the MT100 User's Manual.

For more information, contact Trace Customer Support or refer to the Tracer/ST Service Manual.

CHAPTER 7
MININET OPERATION

Use the MiniNet to copy, compare, and format diskettes across multiple 8000STs. Every 8000ST on the network can perform a different, standalone job, or you can complete jobs in less time by beginning one or more shared jobs. Networked 8000STs also can perform diagnostics and configuration independent of the network.

This chapter describes operation of the 8000ST MiniNet and how it differs from ordinary standalone duplication. Before copying or comparing images over the network, you may wish to familiarize yourself with Chapters 3 and 4, which describe copy and compare operations in detail.

This chapter contains the following sections:

- Network Copy and Compare
- Softgroups

Section 7-1: Network Copy and Compare

Almost any type of copy or compare job can be performed over the network. When you start a job on a networked 8000ST, you choose one system to be the master system. Each system on the network will share the job, provided it meets the parameters listed below. These systems which support the task are sometimes referred to as slave units.

- System must be idle (at startup screen)
- MiniNet must be enabled on the system
- System must have the same group number as master (See Section 7-2)
- System must be same model number as master (for an 8000ST master, system cannot be another Tracer/ST model, such as a Series 6000ST or a Formatter)
- System must have the same, or compatible, drive model as master
- System must have the same software revision as master
- System must be in the same softgroup as master (See Section 7-2)

The table below lists the different duplication tasks which can be performed on the network and references the sections of this manual which provide basic information on performing the tasks.

7-1: Network Copy and Compare—continued

Task	As Described In...
Load a new master diskette into the master system to copy or compare	Sections 3-1 and 4-1
Copy or compare the master image currently in the master system's RAM (the last image loaded through the drive *or* downloaded from another system on the network)	Section 3-2 and 4-2
Copy or compare an image from the internal hard disk on the master unit (if installed)	Sections 5-2 and 5-3
Format-only for specified formats	Section 3-4

The example below describes the steps needed to copy a new master (as described in Section 3-1) over the network without saving the image to a hard disk. This typical example illustrates the areas in which network duplication differs from standalone duplication. For basic differences between the specific duplication tasks, refer to Chapters 3, 4, and 5.

1. Choose any idle 8000ST to be the master system. All operating parameters (quality levels, retries, thresholds, etc.) for the duplication job will be determined by the settings on the master system. Regardless of the number of different jobs currently running on the network, you can start a new job at any idle station.

2. Place the master diskette in the input hopper of the master system.

7-1: Network Copy and Compare—continued

3. From the startup screen, enter a total quantity for the job, if desired, and press **COPY** twice (three times with a hard disk). The system will read in the master diskette and search the network for all systems which are available to share this job (as described at the beginning of this section).

4. The LCD on the master will prompt:

```
WILL USE FLASHING UNITS IN GROUP
CONTINUE  REDEFINE STANDALONE  QUIT
```

At the same time, all the units which are eligible to help will beep and flash their LCDs with the prompt below.

```
KEEP THIS UNIT IN MININET GROUP?
YES        NO
```

If the network does not appear to be functioning correctly, refer to Subsection 8-3-2: MiniNet Troubleshooting. For information on the other softkey options available from the master unit, see Section 7-2.

5. Place blank diskettes in the input hoppers of the master system and all the stations with flashing LCDs.

6. Press the softkey labeled CONTINUE on the master system's front panel to begin duplication using all available slaves. To duplicate using only the master system, press the softkey labeled STANDALONE. To cancel the job, press QUIT. (Other options are described in Section 7-2.)

7-1: Network Copy and Compare—continued

7. The master unit will download the master image and all available job parameters (including quality parameters) to the slaves. Each slave will display a status box showing the percentage of the download received:

```
RECEIVING IMAGE DOWNLOAD...
60 PERCENT COMPLETE
```

8. When the master is done downloading, it will begin copying diskettes. After announcing IMAGE RECEIVED, each slave unit in the group will also begin the task. All units will display the status of the job with some variation of the following screen:

```
SLAVE COPY  TRK:29   PASS:2    TP:5
IBM 1.44             FAIL:1    TF:1
```

PASS and FAIL indicate the number of diskettes passed and failed at this station. TP and TF are the total passed and total failed for the entire group of 8000STs (These may exhibit a slight network delay).

9. Cancel the job by pressing the **CLR/STOP** key. If you quit or abort from a slave unit, the job will continue without that unit. If a quantity was specified for the job, the quantity will be redistributed to other units in the network. To reconnect a slave to the network job, press the **OPTION** button from the startup screen on the slave unit and select RESUME. If the slave unit is powered off, the slave cannot rejoin the job.

   If you quit or abort the job on the master system, all network duplication will stop after confirmation. All slaves will stop duplicating after the current diskette.

7-1: Network Copy and Compare—continued

10. When the job is finished, the master unit will display the final status of the job, including the number of diskettes passed and failed at that station and the total passed and total failed (TP and TF) for the entire group. Slave units will only report the diskette totals for that station.

11. If any errors occur, refer to Chapter 8: Troubleshooting.

Section 7-2: Softgroups

The MiniNet gives you added versatility by allowing you to create separate subnetworks called softgroups of 8000STs within the larger network, without altering the hardware or software configuration. Softgroups are groups of 8000STs which function independently of one another while remaining part of the overall network, or hardgroup.

You can create a softgroup at any time during a network duplication job. When you do so, your master units will only network to a subset of the overall network. Since these settings are permanent until changed (unless the master is powered off), softgroups can be very useful in expanding the flexibility of your overall network.

To create a softgroup, follow these steps:

1. At the beginning of a network duplication job, the slave units will flash and prompt:

   ```
   KEEP THIS UNIT IN MININET GROUP?
        YES        NO
   ```

2. To remove individual stations from this master's softgroup, go to each station's front panel and press the softkey labeled `NO`. When only the desired units are flashing, press `CONTINUE` on the front panel of the master unit. All the units which were removed are now idle and can perform other tasks.

The next time you start a job from this master, it will only look for the idle stations in this smaller softgroup. If no stations are available, the softgroup will be dissolved. You can also dissolve the softgroup at the beginning of any network job by pressing the `REDEFINE` softkey on the master system's front panel before pressing `CONTINUE`.

7-2: Softgroups—continued

> **NOTE**
> For ease of operation, Trace recommends that you designate specific 8000STs which you always use as the master unit for certain types of jobs. Doing so allows you to make use of the same softgroup every time, and ensures that all jobs of that type have the same parameters that were set up on the master unit.

GROUPNUM Feature

The GROUPNUM feature allows you to create permanent subnetworks by assigning group numbers to select 8000STs. 8000STs with different group numbers are completely isolated from each other, as if they were cabled separately. Once the group number is set, it will not change, even if the system is powered down, until it is changed using the procedure described here.

All 8000STs are shipped from the factory with the same group number. To change the group number on any of the units in the network, follow these instructions:

1. From the startup screen, press the **OPTION** button on the front panel.

2. Press the softkey labeled [Setup], and then press the [System] softkey. Press the [Network] softkey. The system will display a submenu of network options.

```
Network Control Settings
        GROUPNUM     DETECT
```

3. Press the softkey labeled GROUPNUM. The system will prompt you to enter a group number.

7-2: Softgroups—continued

4. Enter a number using the numbers on the keypad. Then press the softkey labeled ACCEPT. All 8000STs with this group number will function as a separate network.

In order to return to the default state, where all units function as a single network, set the group number on all units to the same value.

CHAPTER 8
TROUBLESHOOTING

This chapter contains a variety of troubleshooting advice to help you identify problems with your 8000ST, so that you may adjust the system yourself or contact Trace Customer Support for an authorized technician.

The first section describes a number of possible error conditions which are easy to correct. The next section lists all the error messages which you might encounter during normal operation, with suggested corrective actions. Most of these corrective actions can be performed by users with little or no technical experience.

Finally, we describe some software features which are designed to help you diagnose hardware problems with the drive, the diskette loading mechanism, and internal boards. The results of these diagnostics can be very helpful to technicians adjusting or repairing your system, or assisting you over the phone.

This chapter contains the following sections:

- Error Conditions
- Error Messages
- Diagnostics

Section 8-1: Error Conditions

This section describes the most common 8000ST problems. If you experience an error condition which is accompanied by an error message on the LCD, refer to Section 8-2 for more detailed information on the message. If your problem is not described, or you need further assistance, contact Trace Customer Support.

Diskette Jams

If a diskette jams during an operation, the system will normally display an error message. Pressing the softkey labeled CONTINUE at this point will usually clear the jammed diskette into the reject drawer, and duplication will continue.

If a diskette is jammed and the system is displaying the startup screen, press the **CLR/STOP** button on the front panel twice. The system will clear the entire diskette path, and eject any jammed diskettes into the reject drawer.

Cannot Read Display

LCD contrast is normally controlled through the software menus (See Subsection 2-4-2). However, if the contrast is so dramatically out of adjustment that you can no longer view the menus to correct the problem, the contrast can be coarsely adjusted with the keypad. Press the rightmost softkey and keep it depressed, then use number key **1** to lower the contrast or **2** to increase the contrast.

Rejected Diskettes

If you run a job and all the diskettes fail, there may be a problem with your media. If it is a compare job, you may be comparing duplicated diskettes against a corrupt or incorrect master. Try loading the master again, and be certain that the target diskettes are copies of the master you load.

8-1: Error Conditions—continued

System Does Not Recognize Hard Disk

The hard disk feature may be disabled. Use the software menus to make sure the feature is enabled. The hard disk enable feature is located under the option menu in the following tree:

`[Setup]: [System]: [Init]: [Harddisk]: ENABLE`

If `ENABLE` is not showing as an option under `Harddisk` (`DISABLE` is showing instead), the feature is already enabled. In that case, there may be an internal system problem. Contact Trace Customer Support for further assistance.

MiniNet Not Functioning

Refer to Subsection 8-3-2 for the MiniNet troubleshooting procedures.

Section 8-2: Error Messages

If the 8000ST stops operation in the middle of a job, an error message or warning will be displayed on the LCD. Short status messages are also displayed in the lower left corner of the LCD during duplication, to indicate a problem or explain the cause of a reject. All of these messages can be helpful in diagnosing and resolving problems. This section lists potential error messages. Solutions are provided for user serviceable conditions. The errors are listed alphabetically.

Occasionally, an error condition can be cleared simply by powering the 8000ST off and powering it back on. However, if any of these error conditions occur repeatedly, you should contact Trace Customer Support at one of the numbers listed in the front of this manual.

1MB DISK

Meaning: The current diskette was rejected because it is a low density diskette and the master image is not.

Solution: Use high density target diskettes or load a low density master image.

2MB DISK

Meaning: The current diskette was rejected because it is a high density diskette and the master image is not.

Solution: Use low density target diskettes or load a high density master image.

8-2: Error Messages—continued

4MB DISK

Meaning: The current diskette was rejected because it is an extended density diskette and the master image is not.

Solution: Use target diskettes of the correct density or load an extended density master image (if your system has been upgraded to support extended density).

A/D CONVERTER BUSY

Meaning: The floppy channel failed during advanced drive maintenance.

Solution: Attempt the maintenance operation again. If the error does not persist, no action is required. If the error occurs repeatedly, it may indicate a floppy channel problem. Contact Trace Customer Support.

ANALYSIS FAILED

Meaning: The system is unable to read the current master diskette because one or more of the tracks doesn't fit the format assumptions made for this diskette by the read analysis software.

Solution: The master diskette may be damaged. Try using a different copy of the master. The drive could also be out of adjustment. Run the drive diagnostics (See 8-3-1). The master format could be atypical or non-standard in a way that makes it inherently unreadable by this system.

8-2: Error Messages—continued

AZIMUTH BURST NOT FOUND

Meaning: The system is unable to locate the azimuth burst on the AAD.

Solution: The AAD which you are using may be damaged. Try using a different AAD. If the error persists, there may be a hardware failure. Contact Trace Customer Support.

BACKPLANE EEPROM CHECKSUM FAILED!

Meaning: This message indicates a serious hardware failure.

Solution: Not user serviceable. Contact Customer Support.

BACKPLANE IS INCOMPATIBLE WITH SOFTWARE

Meaning: The floppy channel board installed is incapable of working with the software loaded in the CPU.

Solution: Not user serviceable. Contact Trace Customer Support.

BAD ASYMMETRY MEASUREMENT ZONES

Meaning: The system is unable to measure drive head asymmetry for the automatic asymmetry adjustment due to drive failure.

Solution: Have a qualified technician replace the base drive or the drive heads (See the Tracer/ST Service Manual). If the problem persists, the failure is probably in the Copy Drive electronics board.

8-2: Error Messages—continued

BAD ASYMMETRY TABLE POINT

Meaning: The system is unable to measure drive head asymmetry for the automatic asymmetry adjustment due to drive failure.

Solution: Have a qualified technician replace the base drive or the drive heads (See the Tracer/ST Service Manual). If the problem persists, the failure is probably in the Copy Drive electronics board.

CANNOT READ A MARKER DISK!

Meaning: The system is unable to read the current master diskette because it is a CopyStream marker disk.

Solution: Use a different copy of the master. The current diskette has been overwritten as a marker diskette, and cannot be used.

CAN'T FIND AAD RADIAL LOBES

Meaning: The system is unable to locate the alignment lobes on the AAD.

Solution: The AAD which you are using may be damaged. Try using a different AAD. If the error persists, there may be a hardware failure. Contact Trace Customer Support.

8-2: Error Messages—continued

CAN'T IDENTIFY DISK'S FORMAT

Meaning: The system is unable to read the current master diskette because it does not recognize the format.

Solution: The master diskette may be damaged. If you believe your master diskette is in a standard format, try using a different copy of the master. The master format could be atypical or non-standard in a way that makes it inherently unreadable by this system. (The 8000ST cannot copy formats which incorporate copy-protection schemes.)

COMPARE

Meaning: The current diskette was rejected because the duplicated diskette does not match the master image in RAM.

Solution: If this error occurs once in a large duplication run, no action is required. If it occurs frequently, it could indicate a floppy channel problem. The floppy channel is not user serviceable. Contact Trace Customer Support for a replacement.

When this error occurs during a compare operation, especially with a THREE CONSECUTIVE COMPARE ERRORS message, it means that the master against which the copies are being compared is different than the one that made the copies. This can occur when an operator chooses an incorrect version of the master diskette for duplication or compare, or when two supposedly identical silver masters are not really the same.

CPU EEPROM CHECKSUM FAILED!

Meaning: This message indicates a serious hardware failure.

Solution: Not user serviceable. Contact Trace Customer Support.

8-2: Error Messages—continued

DIAGNOSTICS FAILED: «component»

Meaning: The startup self-test failed because of the component shown.

Solution: Make a note of the specific error message(s) given, and contact Trace Customer Support. Internal components are generally not user serviceable.

DRIVE BOARD INCOMPATIBLE WITH SOFTWARE!

Meaning: The drive board installed is incapable of working with the software loaded in the CPU.

Solution: Not user serviceable. Contact Trace Customer Support.

DRIVE EEPROM CHECKSUM FAILED!

Meaning: This message indicates a serious hardware failure.

Solution: Not user serviceable. Contact Trace Customer Support.

DRIVE TYPE HAS CHANGED!

Meaning: Drive module has been switched with the power on during a job, and the new drive is a different type from the original drive.

Solution: Quit any running jobs and power down the system before changing the drive, as described in Section 9-2. Connecting or disconnecting a drive with power on can permanently damage the drive electronics.

8-2: Error Messages—continued

DROPOUT

Meaning: The current track failed because of substandard data signal amplitude on one or more bits. If the retry limit has not been met, the system will attempt to rewrite (if the error occurred during duplication) and/or reverify this track. If the track fails on all retries, the diskette will be rejected.

Solution: If this error occurs repeatedly, it could indicate a problem with the drive or the media. Clean the drive (See 9-1-2) and run the drive diagnostics (See 8-3-1). Try using a different batch of media, or media certified to a higher missing pulse clip level by the manufacturer. (You can probably get the failing media to pass by lowering the 8000ST's threshold setting, but this will reduce the overall quality of the copies placed in the accept hopper. See Section 6-1.)

DUPLICATE FILE NAME
DUPLICATE SET NAME

Meaning: The name you have assigned to the current master (or set of masters in ReadSet) is already used by another file or set on the hard disk.

Solution: Choose another name for the master or set you are saving.

8-2: Error Messages—continued

ERROR FINDING TRACK DATA

Meaning: The system cannot use the current master image because the image is corrupt and is missing important format information.

Solution: Attempt the copy or compare operation again. If the error persists, try loading a new copy of the master image from a diskette. If this error occurs frequently, there may be a problem with the hard disk or system RAM. Refer to Subsection 5-2-2 for information on diagnosing or reformatting the hard disk. If the problem doesn't clear up, contact Trace Customer Support.

ERROR IN MASTER IMAGE CHECKSUM

Meaning: The master image in system RAM is corrupt and cannot be used.

Solution: Attempt the copy or compare operation again by rereading the master diskette. If this error occurs again, there may be a serious hardware problem. Contact Trace Customer Support.

ERROR IN MASTER IMAGE READ

Meaning: The system is unable to retrieve the master image from the hard disk.

Solution: Attempt the copy or compare operation again. If the error persists, try loading a new copy of the master image from a diskette. If this error occurs frequently, there may be a problem with the hard disk or other system-level components. Refer to Subsection 5-2-2 for information on diagnosing or reformatting the hard disk. Contact Trace Customer Support if the problem is not resolved.

8-2: Error Messages—continued

ERROR IN MASTER IMAGE WRITE

Meaning: The current master diskette was stored in RAM, but the system is unable to store it on the hard disk.

Solution: Begin the job again. If the error recurs, there may be a problem with the hard disk or other system-level components. Refer to Subsection 5-2-2 for information on diagnosing or reformatting the hard disk. Contact Trace Customer Support if the problem is not resolved.

FAILED AZIMUTH CALCULATION

Meaning: The azimuth cannot be calculated properly.

Solution: The AAD which you are using may be damaged. Try using a different AAD. If the error persists, there may be a hardware failure. Contact Trace Customer Support.

FAILED CALHEAD ASYMMETRY CALCULATION

Meaning: Due to drive failure, the system cannot interpret the available asymmetry data and perform the automatic asymmetry adjustment.

Solution: Have a qualified technician replace the base drive or the drive heads (See the Tracer/ST Service Manual). If the problem persists, the failure is probably in the Copy Drive electronics board.

8-2: Error Messages—continued

FAN NOT CONNECTED! PLEASE TURN UNIT OFF!

Meaning: The system has detected that the fan on the rear of the 8000ST is not connected.

Solution: Power down the unit and remove the AC line cord from its socket on the rear panel.

Inspecting and repairing the fan connection requires removal of the 8000ST's rear panel assembly, which should be done only by a qualified technician. Contact Trace Customer Support for further information. Do not power up the system until the fan has been reconnected. Before resuming operation, run the extended system diagnostics, as described in Subsection 8-3-3.

FATAL ERROR NUMBER: «error number» «message»

Meaning: A serious system failure has occurred. No further operation of the 8000ST is possible until the unit is powered down and restarted.

Solution: Make a note of the error number and description displayed on the front panel. Also note what the machine was doing at the moment the error occurred. Contact Trace Customer Support with this information.

Many of the FATAL ERROR messages are listed elsewhere in this table. Refer to the specific error message shown.

FC BOARD AND DRIVE ARE NOT COMPATIBLE!

Meaning: A drive type has been installed which is incompatible with the floppy channel board model or version.

Solution: Not user serviceable. Contact Trace Customer Support.

FC BOARD IS INCOMPATIBLE WITH SOFTWARE!

Meaning: The floppy channel board installed is incapable of working with the software loaded in the CPU.

Solution: Not user serviceable. Contact Trace Customer Support.

FC FPGA PROGRAM FAILED

Meaning: The floppy channel board failed at power-up.

Solution: Attempt to restart the system. If this error occurs more than once, you probably need a new floppy channel board. Contact Trace Customer Support.

FC INTERNAL

Meaning: A serious floppy channel error has occurred.

Solution: Not user serviceable. Contact Trace Customer Support.

FIRST DISK MUST BE A MARKER DISK!

Meaning: You have chosen to copy or compare in stream mode, but you did not insert a marker disk to identify the first master.

Solution: The first diskette in the input hopper for CopyStream copy or compare must be a marker disk. Reload the input hopper and start the job again. See Section 3-3 or 4-3 for more information on stream copy and stream compare. To copy or compare just one master at a time, choose NEW on the copy or compare menu.

8-2: Error Messages—continued

FLOPPY CHANNEL DMA LOST

Meaning: A hardware failure has occurred in the floppy channel.

Solution: Not user serviceable. Contact Trace Customer Support.

FLOPPY CHANNEL EEPROM CHECKSUM FAILED!

Meaning: This message indicates a serious hardware failure.

Solution: Not user serviceable. Contact Trace Customer Support.

FLOPPY INTERRUPT HANDLER ERROR

Meaning: A serious system problem has occurred.

Solution: Not user serviceable. Contact Trace Customer Support.

HARDDISK FILE CLOSE ERROR

Meaning: An error occurred while the 8000ST was saving the master image on the hard disk.

Solution: Attempt the operation again. If this error occurs frequently, there may be a problem with the hard disk. Refer to Subsection 5-2-2 for information on diagnosing or reformatting the hard disk.

HARDDISK FILE CREATION ERROR

Meaning: An error occurred while the 8000ST was saving the master image on the hard disk.

Solution: Attempt the operation again. If this error occurs frequently, there may be a problem with the hard disk. Refer to Subsection 5-2-2 for information on diagnosing or reformatting the hard disk.

8-2: Error Messages—continued

HARDDISK FILE OPEN ERROR

Meaning: The system was unable to load the master image file from the hard disk.

Solution: Attempt the operation again. If this error occurs frequently, there may be a problem with the hard disk. Refer to Subsection 5-2-2 for information on diagnosing or reformatting the hard disk.

HARDDISK (IS) FULL

Meaning: There is not enough room on the hard disk for the image you are trying to save.

Solution: Delete some files from the hard disk (Subsection 5-2-1). You might also consider getting a bigger hard disk.

HARD DISK VOLUME HAS BEEN CORRUPTED

Meaning: The system was unable to access the hard disk. The hard disk appears to be damaged.

Solution: If possible, make copies of any masters you need from the hard disk. Reinitialize the hard disk, then run the hard disk diagnostics (See Subsection 5-2-2). If the diagnostics report any problems, you may need a new hard disk.

8-2: Error Messages—continued

HRD

Meaning: The current diskette was rejected because it appears to be an Accurite High Resolution Diagnostic diskette (HRD).

Solution: Although the 8000ST will automatically recognize and reject an HRD diskette, only an Accurite Analog Alignment Diskette (AAD) may be used for performing the built-in drive autotest. Remove the HRD and replace it with an AAD if you want to do drive diagnostics (See Subsection 8-3-1).

IMPROPER RADIAL LOBES

Meaning: Analysis of the AAD alignment track failed.

Solution: The AAD which you are using may be damaged. Try using a different AAD. If the error persists, there may be a hardware failure. Contact Trace Customer Support.

INCOMING FILE HAS UNKNOWN HEADER

Meaning: During a software update, the system does not recognize the format of the file on the update diskette. Either the diskette is not a valid update diskette, or the diskette has been corrupted.

Solution: Make sure you are using an 8000ST update diskette. If necessary, contact Trace Customer Support for another update diskette.

INCORRECT DRIVE TYPE

Meaning: The currently installed drive is incompatible with the format of the master image you selected from the hard disk.

Solution: Install a drive of the correct type, or choose a different master image.

8-2: Error Messages—continued

INCORRECT TIMING BETWEEN LOBES

Meaning: Analysis of the AAD alignment track failed.

Solution: The AAD which you are using may be damaged. Try using a different AAD. If the error persists, there may be a hardware failure. Contact Trace Customer Support.

INDEX BURST NOT FOUND

Meaning: The system is unable locate the index burst on the AAD index-to-data track.

Solution: The AAD which you are using may be damaged. Try using a different AAD. If the error persists, there may be a hardware failure. Contact Trace Customer Support.

INDEX-MARK

Meaning: The current diskette was rejected because it failed to meet the user defined index-to-mark timing tolerance in the In-Process Chucking Detection test.

Solution: The diskette is probably mischucked and should be discarded. If the error occurs frequently, the index-to-mark tolerance may be set too stringently. Choose a larger tolerance, or use the Trace default setting (See Subsection 6-3-3).

8-2: Error Messages—continued

INDEX TO MARK TIMING ERROR

Meaning: The current diskette was rejected because it failed to meet the user defined index-to-mark timing tolerance in the In-Process Chucking Detection test.

Solution: The diskette is probably mischucked and should be discarded. If the error occurs frequently, the index-to-mark tolerance may be set too stringently. Choose a larger tolerance, or use the Trace default setting (See Subsection 6-3-3).

INPUT HOPPER EMPTY

Meaning: During a copy or compare operation, there are no diskettes in the input hopper.

Solution: Press QUIT to cancel the job, or place more diskettes in the input hopper and press CONTINUE.

INVALID DRIVE TYPE

Meaning: The currently installed drive is incompatible with the format of the master image you have selected from the hard disk.

Solution: Install a drive of the correct type, or choose a different master image.

INVALID FLOPPY CHANNEL REV

Meaning: The software and hardware in your 8000ST are of incompatible revision levels.

Solution: Contact Trace Customer Support for upgrade information.

8-2: Error Messages—continued

INVALID FORMAT

Meaning: The system is unable to read the current master diskette because the 8000ST cannot duplicate this format.

Solution: The master diskette may be damaged. If you believe your master diskette is in a standard format, try using a different copy of the master. The 8000ST cannot copy formats which incorporate copy-protection schemes.

INVALID MEDIA DENSITY

Meaning: You have inserted a diskette which is the wrong density for the installed drive.

Solution: Use different media or install a different Copy Drive. For a software update, use a Copy Drive which can read high density diskettes.

INVALID PRECOMP TABLE

Meaning: The values in the user defined precompensation table are not valid.

Solution: If you created your own precompensation table on a setup diskette (as described in the Service Manual), repeat the process of creating and loading the setup diskette. Make sure you are using valid precompensation levels. If you have never altered the system precompensation tables, contact Trace Customer Support.

8-2: Error Messages—continued

INVALID WRITE CURRENT TABLE

Meaning: The values in the user defined write current table are not valid.

Solution: If you created your own write current table on a setup diskette (as described in the Service Manual), repeat the process of creating and loading the setup diskette. Make sure you are using valid write current levels. If you have never altered the system write current tables, contact Trace Customer Support.

ISV

Meaning: During the ISV test, variations in the drive motor speed exceeded user defined tolerances.

Solution: If this error occurs repeatedly, it could indicate a problem with the media, but it more likely indicates that the drive must be repaired or replaced.

LOADER JAM *#nn*

Meaning: A diskette is stuck somewhere in the 8000ST. *nn* is a numeric code which helps identify the exact location of the jam. See Subsection 8-2-1 for a list of jam codes.

Solution: Make sure that the reject drawer is not filled to capacity. Press CONTINUE. The 8000ST will attempt to clear the diskette path and proceed with the operation. If the diskette is still jammed, attempt to remove it manually. If the jammed diskette was a master, you will need to restart the operation.

8-2: Error Messages—continued

LOW MARGIN

Meaning: The current track failed because of substandard data placement on one or more bits. If the retry limit has not been met, the system will attempt to rewrite (if the error occurred during duplication) or reverify this track. If the track fails on all retries, the diskette will be rejected.

Solution: If this error occurs repeatedly, it could indicate a problem with the drive or the media. Clean the drive (See 9-1-2) and run the drive diagnostics (See 8-3-1). Run the asymmetry recalibration utility for high-density and/or low-density media, as applicable (See the Service Manual). Try using a different batch or a better quality grade of media.

If low margin failures still occur on this drive while not occurring on other drives using the same media, the drive should be replaced. (You can probably get the failing media to pass by lowering the 8000ST's window setting, but this will reduce the overall quality of the copies placed in the accept hopper. See Section 6-1.)

8-2: Error Messages—continued

LOW TAA

Meaning: The current track failed because one or more bits fell below the user defined minimum amplitude. If the retry limit has not been met, the system will attempt to rewrite (if the error occurred during duplication) or reverify this track. If the track fails on all retries, the diskette will be rejected.

Solution: If this error occurs repeatedly, it probably indicates that the media is bad. Try using a different batch or a better quality grade of media.

If low TAA failures still occur on this drive while not occurring on other drives using the same media, the drive should be replaced. (You can probably get the failing media to pass by lowering the 8000ST's MTA setting, but this will reduce the overall quality of the copies placed in the accept hopper. See 6-3-5.)

MARKER

Meaning: The current diskette was rejected because it is a special marker disk for CopyStream operations.

Solution: Do not use this diskette as a target diskette.

MASTER FORMAT DOES NOT MATCH SET FORMAT

Meaning: The set read-in failed, because the format of the current master diskette is different than the other diskettes in the set.

Solution: All master diskettes in a set must be in the same format. Do not include the failed master in the set.

8-2: Error Messages—continued

MISC. FILE ERROR

Meaning: The system was unable to access the hard disk. The hard disk appears to be damaged.

Solution: If possible, make copies of any masters you need from the hard disk and reinitialize the hard disk, then run the hard disk diagnostics (See Subsection 5-2-2). If the diagnostics report any problems, you may need a new hard disk. Contact Trace Customer Support.

MUST READ IN A MASTER IMAGE

Meaning: You have chosen to copy or compare against the master image in RAM, but there is no master image in RAM.

Solution: Load a new master using the NEW feature of copy or compare, as described in Sections 3-1 and 4-1.

NO ADDRESS MARKS FOUND

Meaning: The system is unable to locate any sector ID fields. The master diskette could be recorded in an unsupported format, may be of the wrong density for the drive installed, or may have been erased (degaussed) or severely damaged. The diskette may also be upside down or backwards in the drive.

Solution: Check the orientation of the master diskette (See 2-3-1). Make sure the drive you are using is the correct type for the density of your master diskette (for example, an LD/HD drive cannot read an extended density diskette). If you believe the master is recorded in a supported format, and the diskette orientation and drive type are correct, the master diskette may be damaged. Try using a different copy of the master. The drive could also be severely out of adjustment. Run the drive diagnostics (See 8-3-1).

8-2: Error Messages—continued

NO DRIVE ATTACHED
NO DRIVE IN THE SYSTEM

Meaning: The Copy Drive is not installed, or it is not connected.

Solution: Refer to Section 9-2 to make sure that your Copy Drive is correctly installed and that the drive cable is attached.

NO DRIVE EE CORR VALUES

Meaning: The values for automatic asymmetry adjustment were not recorded on the drive board.

Solution: Contact Trace Customer Support for a new drive board.

NO FC ATTACHED

Meaning: The floppy channel is not responding.

Solution: Not user serviceable. Contact Trace Customer Support.

NO FILES FOUND

Meaning: You attempted to view a list of files stored on the hard disk, but there are no files stored on the hard disk.

Solution: To save master images on the hard disk, refer to Subsection 5-1-1.

NO FLOPPY CHANNEL EE CORR VALUES

Meaning: The values for automatic asymmetry adjustment were not recorded on the floppy channel board.

Solution: Contact Trace Customer Support for a new floppy channel board.

8-2: Error Messages—continued

NO INDEX

Meaning: The system cannot read or write to the current diskette because it cannot detect the drive's index signal. Could also be caused by a diskette being upside down or backwards in the drive.

Solution: This error could occur if the diskette was not seated properly in the drive. Try using the diskette again. Also check the orientation of the diskettes in the input hopper. If the problem recurs, the diskette is probably bad. If the problem occurs on other diskettes, the drive may be defective.

NO MEMORY AVAILABLE
NO MEMORY AVAILABLE FOR IMAGE

Meaning: There is not enough system memory available to create a new master image. The hardware could be damaged, or the software could be failing to recognize the installed memory.

Solution: You may be trying to load an extended density image. Without the 8 MB memory upgrade, the 8000ST only supports low density and high/quad density duplication. If you receive this message when loading a standard high or low density image, you may need repairs. Check the hardware configuration (See 2-4-1) to make sure the system is recognizing all installed memory (at least 4 MB). Contact Trace Customer Support.

NO PROPER MASTER IMAGE

Meaning: The master image currently in RAM has been corrupted.

Solution: Load a new master using the NEW feature of copy or compare, as described in Sections 3-1 and 4-1.

8-2: Error Messages—continued

NO SETS FOUND

Meaning: During a CopySet copy or compare operation, there are no sets stored on the hard disk.

Solution: To save master image sets on the hard disk, refer to Subsection 5-1-1. To copy or compare against a single master image on the hard disk, refer to Subsection 5-1-2 or 5-1-3.

NO VRF DMA

Meaning: This message indicates a hardware failure.

Solution: Not user serviceable. Contact Trace Customer Support.

NO WRT DMA

Meaning: This message indicates a hardware failure.

Solution: Not user serviceable. Contact Trace Customer Support.

NOT A VALID ALIGNMENT DISK

Meaning: The diskette you inserted for drive diagnostics either was not an Accurite Analog Alignment Diskette (AAD), or was the wrong type of AAD for the installed drive. The AAD may also be corrupted.

Solution: Make sure that the diskette you inserted is an Accurite Analog Alignment Diskette of the correct type and model. Refer to Subsection 8-3-1 for a list of approved AADs. If the AAD continues to fail, try a new AAD.

8-2: Error Messages—continued

NOT VALID MEDIA!

Meaning: You have inserted a diskette which is in some way not valid for the current operation or which cannot be read by the installed drive.

Solution: Be sure that the media and drive you are using are compatible and are correct for the selected test or operation.

QUALITY PARAMS BELOW DEFAULT STANDARDS

Meaning: You have selected quality parameters (window or threshold) that are less stringent than the defaults recommended by Trace.

Solution: Press CONTINUE to keep the parameters you have defined, or press QUIT and refer to Section 6-1 for information on the Trace defaults.

READ TRACK ERROR

Meaning: The system is unable to read the current master diskette because one or more tracks on the diskette are bad.

Solution: The master diskette may be damaged. Try using a different copy of the master. The drive could also be out of adjustment. Run the drive diagnostics (See 8-3-1).

8-2: Error Messages—continued

RETRIES

Meaning: The current diskette was rejected because the number of tracks which required retries exceeded the number specified in the RETRIED TRACKS/DISK parameter.

Solution: The RETRIED TRACKS/DISK limit may be made less stringent by increasing the number of tracks that can have retries, or it may be turned off altogether by restoring the default setting of 0 (zero).

If many diskettes are being rejected for excessive retries, however, it may indicate a problem with the drive or the media. Observe the unit as it is copying a diskette and note the reason for the retries by watching the lower left corner of the LCD. Typically, retries will occur for DROPOUT or LOW MARGIN, or a combination of the two. Refer to these two error messages elsewhere in this table.

REVERIFY

Meaning: The current diskette was rejected because it failed the First Track Reverify portion of the In-Process Chucking Detection test.

Solution: The diskette is probably mischucked and should be discarded. If the error occurs frequently, it could indicate a drive problem. Run the drive diagnostics described in Subsection 8-3-1.

8-2: Error Messages—continued

RPM ERROR

Meaning: The current track failed because of a drive speed error. If the retry limit has not been met, the system will attempt to read this track again.

Solution: If this error occurs repeatedly, it could indicate a problem with the drive or the media. Clean the drive (See 9-1-2) and run the drive diagnostics (See 8-3-1). Try using a different brand of media. If the problem persists, the drive module or possibly the floppy channel board may need to be replaced. Contact Trace Customer Support for further assistance.

STEP ERROR

Meaning: The drive module failed to make the correct number of track steps during duplication, resulting in one or more tracks being recorded in the wrong place on the diskette. Could also indicate that the drive cable is loose.

Solution: The 8000ST's built-in drive diagnostics will not usually detect this problem, as it relates only to the drive's head positioner mechanism rather than to the drive's magnetic read/write capabilities. In addition, the problem is typically intermittent. Check the drive cable connection. However, if this error occurs repeatedly during duplication, the drive should be replaced. Step error problems are not user serviceable.

8-2: Error Messages—continued

SW MODEL NUMBER DOES NOT MATCH HARDWARE!

Meaning: The system software installed in this system was intended for a different Tracer/ST system (such as the Series 6000ST).

Solution: If you have other models of the Tracer/ST at your site, make sure that you aren't trying to install the wrong software or hardware in this unit. Contact Trace Customer Support for further assistance.

SWUPDATE HAS WRONG DRIVERS!

Meaning: During a software update, the software on the update diskette was not intended for your system.

Solution: Make sure you are using an 8000ST update diskette. If necessary, contact Trace Customer Support for another update diskette.

8-2: Error Messages—continued

THREE CONSECUTIVE «error message» ERRORS

Meaning: Three diskettes in a row have been rejected due to the same error. This feature is intended to detect operator errors that would result in every diskette being rejected, thus jamming the loader mechanism. Some common errors that are detected in this way include loading write-protected target diskettes when the system is set to write only on non-write-protected diskettes, or loading low density diskettes when a high density master image has been selected.

Normal duplication-related DROPOUT and LOW MARGIN errors are not detected this way. COMPARE errors are only trapped when they occur at exactly the same byte location on the same track and side. Three consecutive COMPARE errors during a compare-only (cross-verification) job indicates that the master image against which you are comparing is different than the image which made the copies.

Solution: Check your process and attempt the job again.

If three consecutive COMPARE errors occurred during a compare-only job, be sure that you are using the correct master image and the correct target diskettes. This error often happens when you utilize more than one copy of a master diskette, and these copies are not actually byte-for-byte identical to each other. Two or more diskettes may actually contain the same files and be functionally equivalent, but still fail to compare against each other in the 8000ST or other commercial duplication equipment. Differences in master format interpretation between different duplication systems can also produce this error. Refer to Appendix A for additional information on cross-verification.

8-2: Error Messages—continued

TRACK ANALYSIS ERROR

Meaning: The system is unable to read the current master diskette because one or more tracks on the diskette are bad.

Solution: The master diskette may be damaged. Try using a different copy of the master. The drive could also be out of adjustment. Run the drive diagnostics (See 8-3-1).

TRACK ZERO REVERIFY ERROR

Meaning: The current diskette was rejected because it failed the First Track Reverify portion of the In-Process Chucking Detection test.

Solution: The diskette is probably mischucked and should be discarded. If the error occurs frequently, it could indicate a drive problem. Run the drive diagnostics described in Subsection 8-3-1.

UNEXPECTED

Meaning: A catastrophic system failure has occurred.

Solution: Not user serviceable. Contact Trace Customer Support.

8-2: Error Messages—continued

UNIT TOO HOT! PLEASE TURN POWER OFF!

Meaning: The thermal sensor has detected that the system temperature is too high. The fan may be blocked or may not be functioning correctly.

Solution: Power down the unit. Have a qualified technician try to determine why the unit overheated, and correct the problem if possible. Several inches of clear space at the rear of the unit is required to ensure adequate cooling, and the fan area must be kept free of dust. Contact Trace Customer Support for assistance or to order a replacement fan assembly, if required. Before resuming operation, run the extended system diagnostics, as described in Subsection 8-3-3.

VRF LOST

Meaning: The floppy channel didn't recover as many bits from the track as was expected.

Solution: If this error occurs once in a large duplication run, no action is required. If it occurs frequently, it indicates a floppy channel problem. The floppy channel is not user serviceable. Contact Trace Customer Support.

VRF XSUM

Meaning: A checksum error occurred during track verification, indicating that the track image or checksum was corrupted.

Solution: If this error occurs once in a large duplication run, no action is required. If it occurs frequently, it indicates a floppy channel problem. The floppy channel is not user serviceable. Contact Trace Customer Support.

8-2: Error Messages—continued

WARNING - PERFORM DRIVE MAINTENANCE!

Meaning: The drive maintenance counter passed the limit for preventive drive maintenance. This message will appear at every empty hopper and end of job until the drive maintenance is performed.

Solution: Run the drive maintenance routine as described in Subsection 9-1-2.

WARNING - PERFORM LOADER MAINTENANCE!

Meaning: The loader maintenance counter passed the limit for preventive loader maintenance. This message will appear at every empty hopper and end of job until the loader maintenance is performed.

Solution: Run the loader maintenance routine as described in Subsection 9-1-3.

WR PROTECT

Meaning: The current diskette was rejected because it is write-protected. Also occurs if a non-write-protected diskette is inserted when the system is set to write only on write-protected diskettes (See Subsection 2-4-2).

Solution: Make sure the rejected diskette is not a master diskette or a cleaning diskette which was accidentally placed in the input hopper. Correct the write-protect state of the diskette and place it back in the input hopper. Make sure the 8000ST's write-protect setting agrees with the write-protect state of the media you are using (See 2-4-2).

8-2: Error Messages—continued

WRONG DISK TYPE

Meaning: The disk type detected by the drive does not match the disk type selected.

Solution: If you created your own write current table on a setup diskette (described in the Tracer/ST Service Manual), repeat the process of creating and loading the setup diskette. Make sure you are using valid write current levels. If you have never altered the system write current tables, contact Trace Customer Support.

WRT LOST

Meaning: The floppy channel wasn't able to write as many bits to the track as was required.

Solution: If this error occurs once in a large duplication run, no action is required. If it occurs frequently, it indicates a floppy channel problem. The floppy channel is not user serviceable. Contact Trace Customer Support.

WRT XSUM

Meaning: A checksum error occurred during track write, indicating that the track image or checksum was corrupted.

Solution: If this error occurs once in a large duplication run, no action is required. If it occurs frequently, it indicates a floppy channel problem. The floppy channel is not user serviceable. Contact Trace Customer Support.

8-2: Error Messages—continued

8-2-1: Jam Codes

To help you further analyze jams, the Tracer/ST provides a two-digit code which identifies the location of an error. To learn the meaning of a jam code, refer to Table D below. Refer to the Tracer/ST Service Manual for a description of the sensors and loader mechanics.

Table D: Loader Jam Codes

Code	Meaning
00	No error (or no known reason).
01	During an Accept or Reject, the diskette did not reach the At_Drive sensor. The diskette is stuck in the drive.
02	During an Accept or Reject, the diskette did not clear the At_Drive sensor. The diskette is stuck partially outside the drive.
03	During an Accept, the diskette did not reach the At_Accept sensor. The diskette got stuck outside the drive, before it reached the accept bin.
04	During an Accept, the diskette did not clear the At_Accept sensor. Something prevented the diskette from coming out the front of the Tracer/ST.
05	During a Reject, the diskette did not reach the At_Accept sensor. The diskette got stuck outside the drive, before it reversed direction and dropped into the reject bin.
06	During a Reject, the diskette did not clear the At_Accept sensor. This can occur if the diskette gets caught at the front of the Tracer/ST, or overshoots and cannot be pulled back into the reject bin.
07	During an Insert, the diskette did not clear the At_Drive sensor. The diskette could not be inserted into the drive.

8-2: Error Messages—continued

Table D: Loader Jam Codes (cont.)

Code	Meaning
08	During a Reject, the Tracer/ST could not pull the diskette back onto the rollers to clear the bottom stacker arm.
09	During a Reject, the Tracer/ST pulled the diskette back too far, and dropped it inside the Tracer/ST.
10	During a Reject, the diskette was pulled back into the Tracer/ST and the bottom stacker arms were lifted, but the diskette could not be dropped into the reject bin.
11	When the **CLR/STOP** button was pressed, a diskette got stuck outside the drive.
12	When the **CLR/STOP** button was pressed, a diskette got stuck between the At_Accept and At_Drive sensors.
21	3.5" unit failed going for a Pick.
44	The diskette passed the At_Accept sensor when it should not be there.
45	The diskette passed the At_Drive sensor when it should not be there.
64	3.5" Poke error going counter-clockwise from 12:00 to 9:00.
65	3.5" Poke error going clockwise to 12:00.
66	3.5" Poke routine timed out.
67	3.5" Poke routine timed out.
80	3.5" Eject error going counter-clockwise from 12:00 to 9:00.
81	3.5" Eject error going clockwise to 9:00.
82	3.5" Eject routine timed out.
83	3.5" Eject routine timed out.

8-2: Error Messages—continued

Table D: Loader Jam Codes (cont.)

Code	Meaning
96	The Tracer/ST thinks there is a diskette in the drive. The diskette came out of the input hopper but never reached the Accept or Reject bins. To clear this error, press the **CLR/STOP** button on the front panel.
97	The previous Insert, Accept, or Reject command was aborted because the At_Drive sensor was blocked when the command was received. Press **CLR/STOP** and proceed.
98	The previous Insert, Accept, or Reject command was aborted because the At_Accept sensor was blocked when the command was received. Press **CLR/STOP** and proceed.
134	The previous Insert, Accept, or Reject command was aborted because the At_Drive and At_Accept sensors were both blocked when the command was received. Press **CLR/STOP** and proceed.
135	General purpose timeout error.

Section 8-3: Diagnostics

This section describes several diagnostic tests which you can run on the 8000ST. All of the tests can be initiated from the front panel software menus. The first three tests described provide clear feedback in a format which can help non-technical users determine whether their 8000ST may need adjustment or repair.

The remaining topics cover mechanical tests and system information which are not generally required for user diagnostics. However, Trace Customer Support may refer you to these subsections to perform the diagnostics under their supervision.

8-3-1: Drive Diagnostics

The built-in diagnostics on the 8000ST allow the user to test certain aspects of drive performance automatically during a copy or compare job. The drive diagnostics require an Analog Alignment Diskette (AAD), model 350/2A (Trace part number 550-43636-01; Accurite part number 810234A) or model 355/2A (Accurite part number 810307A).

The drive diagnostics measure four separate aspects of drive performance, and compare those measurements against Trace recommended values. The diagnostics measure Radial Alignment (RAD), Index-to-Data Ratio (IDX), Head Azimuth (AZM), and Track Average Amplitude (TAA). If any measurements are outside the range recommended by Trace, the test fails. If any of the four tests fail, you should have a qualified technician adjust the drive.

The drive diagnostics are performed automatically when the 8000ST detects an AAD in the drive. To perform the drive diagnostics, proceed as follows:

1. Place the Analog Alignment Diskette (AAD) in the input hopper during a copy or compare job.

8-3: Diagnostics—continued

2. The system will insert the AAD into the drive and begin the tests. During the tests, the status will be displayed on the LCD.

```
ALIGNMENT DISK TESTS IN PROGRESS
RAD:PASS IDX:PASS AZM:TEST TAA:
```

   The test currently running displays the status TEST. Completed tests show a status of PASS or FAIL.

3. When the test is complete, the top line of the LCD reports that the whole test passed or that one or more tests were marginal or failed. If the test passed, operation will continue automatically. The AAD will be ejected into the reject drawer, but will not count as a failed diskette.

4. If any of the tests failed, the bottom line continues to show the status of the four individual tests. Press any key to continue normal operation. Contact Trace or an authorized technician to have the drive adjusted for optimum performance.

The 8000ST also offers advanced on-line drive diagnostics, which are performed using the Analog Alignment Diskette. For more information on these diagnostics, call Trace Customer Support to enroll in an 8000ST service class or refer to the Tracer/ST Service Manual.

8-3: Diagnostics—continued

8-3-2: MiniNet Troubleshooting

The most common error condition on the MiniNet is when the 8000STs behave like standalone units, and do not recognize any other units in the network. If only one unit exhibits this symptom while the others are networking normally, check the problem unit to ensure that the MiniNet feature is enabled (See Section 2-2).

If the entire network is failing to communicate, you may have a loose connection, or a bad cable or connector, or an internal 8000ST problem. Due to the nature of Ethernet networks, one bad cable or connector can stop all network communication, without providing any indication of which component has failed.

Two error procedures are offered below. The first one is a simpler software procedure, so you may want to try it first. If you still have a network communication problem after trying the software procedure, or if you are certain the problem is hardware-related, use the hardware troubleshooting procedure.

MiniNet Software Troubleshooting Procedure

The 8000ST provides a diagnostic tool, DETECT, for troubleshooting the MiniNet which may help you to isolate the source of your problem. DETECT will help you determine if the systems are electronically capable. For DETECT to find a system, the following things must be true:

- MiniNet must be enabled on the system
- System must be idle (at startup screen)
- System must have same group number as master

8-3: Diagnostics—continued

> **NOTE**
> Systems found by DETECT are not necessarily capable of sharing a MiniNet job. See the beginning of Chapter 3 or 4 for job sharing requirements.

To use DETECT, follow these instructions:

1. Choose one 8000ST to be the master unit for this diagnostic. From the startup screen, press the **OPTION** button .

2. Press the softkey labeled [Setup], and then [System]. Press the [Network] softkey. Finally, press DETECT.

3. The master system will search the network for idle 8000STs which have the MiniNet feature enabled and have the same group number as the master system. All such units will display the message CONNECTED TO THE NETWORK.

4. Press any key to remove the current message from the LCD on each of the units.

If there is a unit in the MiniNet which was not indicated as part of this master system's subnetwork when you expected it would be, use the following checklist to troubleshoot the problem:

- Check the software configuration of the problematic unit to ensure that the MiniNet feature is enabled (See Section 2-2).

- Check the group number of the unit against the group number of the master system (See Section 7-2).

If one or more units are not responding to DETECT, a networking hardware or cabling problem is indicated. See the hardware troubleshooting procedure below.

8-3: Diagnostics—continued

MiniNet Hardware Troubleshooting Procedure

On a larger network (10 or more 8000STs), you may want to physically break the network into two smaller networks before running this procedure. Most likely, one of these small networks will run properly. Run this procedure only on the other small network.

1. Check all network connections. Make sure all T-connectors are firmly in place and cables and terminators are properly connected to the T-connectors (Refer to Subsection 2-1-1 for details).

2. Remove one 8000ST from the network with one cable and one connector. Configure the network to run without that unit, with terminators on either end of the network (See Figure 2.3 in Section 2-1). Test the network using the software troubleshooting procedure above.

3. Keeping the network at the same size, continue to substitute 8000STs, cables, and connectors out of the network until you isolate the problematic part.

If you need assistance or to order spare parts or repairs, contact Trace Customer Support. If you purchase cables or connectors from a source other than Trace, make sure they have an impedance rating of 50 ohms.

8-3: Diagnostics—continued

8-3-3: Internal Hardware Tests

As mentioned in Section 2-2, the system runs a short self-test of internal hardware every time the system is started up. If you suspect trouble, watch the LCD during the self-test and make a note of any error messages or warnings. These messages can be very helpful to Customer Support in troubleshooting your problem.

You also have the option of running more extended diagnostic tests, both at startup and while the system is running. To run an extended test of the memory and internal hardware at system startup, hold down the **OPTION** button while powering on the system. You should see the message `LONG MEMORY TEST` on the LCD. The entire diagnostic will take several minutes. Write down any warnings or error messages which are displayed during the diagnostic.

While the system is powered on, you can begin an extended internal diagnostic from the software menus. This diagnostic checks all the major internal components and reports if any components failed. To run the extended internal diagnostic, press the **OPTION** button on the front panel. Then move down through the menus by pressing `[Utility]`, `[Test]`, and finally `SYSTEST`.

The diagnostic will run for several minutes. To cancel the diagnostic, hold down the **CLR/STOP** key. The LCD displays whether the overall diagnostic passed or failed.

```
DIAGNOSTICS: |CPU     |B|L|FC      |DV|
PASSED       |.......|.|.|.........|..|
```

The readout is divided into five components: CPU, backplane (B), loader mechanism (L), floppy channel board (FC), and drive (DV). An **F** under any of the headings indicates that the component failed. An **i** indicates that the test was incomplete. For information on any failed tests, contact Trace Customer Support.

8-3: Diagnostics—continued

8-3-4: Loader Mechanism Tests

The 8000ST offers several software options which enable the user to run the system mechanically without performing duplication and to isolate specific movements of the diskette loading mechanism, often referred to as the loader. The functions described in this portion of the manual are primarily provided to help Trace technicians do advanced troubleshooting. However, under some circumstances, Trace Customer Support may ask you to run some of these tests.

> **CAUTION**
> Be very careful when operating the 8000ST with the cover removed. Keep hair, jewelry, fingers, and loose clothing away from all moving parts.

Cycle Loader

These three tests allow you to run the 8000ST without duplicating diskettes, to test the mechanics. The `[Cycle]` menu is located in the option menu tree, under `[Utility]:[Loader]`. The tests function as follows:

`ACCEPT`	Insert diskettes from the input hopper and eject them to the accept hopper
`REJECT`	Insert diskettes from the input hopper and eject them to the reject drawer
`NODISKS`	Go through the motions of inserting and ejecting diskettes, but with no diskettes in the system

`ACCEPT` and `REJECT` will run until the input hopper is empty, and then prompt the user to choose `CONTINUE` or `QUIT` using the softkeys. `NODISKS` runs until you press the **CLR/STOP** button.

8-3: Diagnostics—continued

Individual Functions

The individual functions also test the mechanics, by breaking the duplication cycle down into three separate motions: inserting diskettes, ejecting diskettes to the input hopper, and ejecting diskettes to the reject drawer. The individual functions are listed on the [Manual] menu, which is located in the option menu under [Utility]: [Loader].

There are four options on the [Manual] menu, which perform the following functions:

INSERT	Insert one diskette from the input hopper
ACCEPT	Eject one diskette from the drive to the accept hopper
REJECT	Eject one diskette from the drive to the reject drawer
CLEAR	Clear all diskettes from the system

The system may issue an error message if you attempt to perform functions out of order (for example, if you press REJECT when there is no diskette in the drive). If an error message appears, press any key to clear the message.

8-3: Diagnostics—continued

Crankwheel and Roller Movements

The seven functions on the [Diags] menu perform even smaller motions of the various cranks and rollers in the loader mechanism. When you enter the menu, only the first three options are displayed. To see additional options, press the softkey labeled -more-. The -more- softkey will scroll through all available softkey options. [Diags] is located in the option menu tree, under [Utility]: [Loader]. These tests should only be performed when the input hopper is empty.

PICK	Push bottom diskette in input hopper to At-Drive roller (rear roller)
POKE	Push diskette into Copy Drive
EJECT	Hit eject bar on Copy Drive
CYCLE	Repeat PICK, POKE, and EJECT
FORWARD	Spin rollers toward drive for 2.5 seconds, pause, and repeat
BACKWARD	Spin rollers away from drive for 2.5 seconds, pause, and repeat
SENSORS	Display current status of all 4 diskette sensors on the LCD (CLEAR or BLOCKED)

8-3: Diagnostics—continued

8-3-5: Revision Levels and Hardware Serial Numbers

For information on the revision level of your 8000ST software and the serial numbers of the system, drive, and component boards, you do not need to open the unit. Software options are available to help you view this information. Follow these instructions if you need to view revision levels or serial numbers.

Software and Hardware Revisions

To view the software revision level from the system startup screen, hold down the **OPTION** button. The system provides the software version level with a summary of the installed drive and hardware options (as described in Subsection 2-4-1).

Information on the revision levels of the 8000ST internal hardware is available through the option menus. From the startup screen, press the **OPTION** button. Then press the softkeys labeled `[Setup]`, `[System]`, and `[SysInfo]`. From the `[SysInfo]` menu, press the softkey labeled BOARDREV. The LCD will display the revision levels of the installed CPU board, backplane board (BP), floppy controller board (FC), and drive electronics (DRV).

Component Serial Numbers

Software options to view the serial numbers of the system, the internal boards, and the Copy Drive chassis are all located in the options menu tree.

To view the system serial number, press the **OPTION** button and choose `[Setup]`, `[System]`, and `[SysInfo]`. Press the softkey labeled SYSTEM# to display the serial number.

8-3: Diagnostics—continued

To view the serial numbers of the internal boards, press the **OPTION** button and choose [Setup], [System], and [SysInfo]. Press the softkey labeled BOARD# to display the serial numbers. The display will include serial numbers for four boards: the CPU board, the back plane board (BP), the floppy controller board (FC), and the drive electronics (DRV).

The drive chassis serial number is also accessed through the option menu tree. Each Trace Copy Drive has a serial number associated with it. To view the drive chassis serial number, press the **OPTION** button, and then press the softkeys labeled [Setup], [System], [Init], [Drive], and finally SERIAL#.

For information on editing serial numbers after replacing a system component, refer to the Tracer/ST Service Manual.

CHAPTER 9
MAINTENANCE

The 8000ST is built to withstand the rigors of volume duplication. In ordinary use, it requires very little maintenance. There are some simple steps you can take periodically to keep your 8000ST in peak operating condition. These preventive maintenance procedures are described in this chapter. In addition, this chapter describes drive replacement.

This manual does not provide advanced maintenance procedures. Advanced maintenance should generally be performed by an authorized Trace technician. Contact Trace Customer Support or refer to the Tracer/ST Service Manual for more information.

This chapter contains two sections:

- Routine Maintenance
- Changing Drives

Section 9-1: Routine Maintenance

Trace recommends some periodic maintenance to keep your 8000ST in peak operating condition. Software options on the 8000ST help facilitate these maintenance procedures. In addition, the 8000ST has built-in maintenance flags which keep track of how many diskettes have been duplicated in the 8000ST and in each Copy Drive, and alert the operator when it is time to perform preventive maintenance.

This section describes how to view the counters which trigger the maintenance flags, and how to alter the interval between maintenance flags. It also provides preventive maintenance procedures for the drive heads and the diskette loading mechanism.

9-1-1: Maintenance Flags

The 8000ST has a diskette counter which tracks the number of diskettes which have been cycled through the system. A second counter on the Copy Drive keeps track of the diskettes duplicated in the currently installed Copy Drive. Both of these counters can be accessed through the software menus.

When you view the counters, you see how many diskettes have been run through the drive and the system (loader) over the life of the equipment, as well as a count of the number duplicated since the last preventive maintenance.

When the maintenance count reaches a specified limit, the 8000ST flags the operator with a beep and a message on the LCD that it is time to perform routine preventive maintenance on the drive or the diskette rollers. Maintenance flags are displayed between jobs and when the input hopper is empty.

9-1: Routine Maintenance—continued

The maintenance limit is factory set to the Trace recommended defaults, but the number can be changed through the software menus. The recommended defaults are 1,000 diskettes for cleaning the drive heads and 2,500 diskettes for loader maintenance.

The 8000ST automatically resets the maintenance count on the drive to zero when the drive head cleaning procedure is run from the front panel. Running the diskette roller cleaning procedure automatically resets the maintenance count for the system.

View Diskette Counters

1. From the startup screen, press the **OPTION** button.

2. Press the softkey labeled `[Utility]`. Use the `-more-` softkey to display additional options. Then press COUNTERS.

3. The system displays the maintenance count (`Mnt Cnt`) and life count (`Life Cnt`) for the currently installed Copy Drive and the system mechanics (the loader).

```
Drive:  Life Cnt: 11979  Mnt Cnt: 979
Loader: Life Cnt: 25194  Mnt Cnt: 1327
```

9-1: Routine Maintenance—continued

Change Maintenance Limits

All 8000STs are shipped with the drive and loader maintenance limits already set. The maintenance limit on the drive is set to 1,000 diskettes, while the loader maintenance limit is 2,500 diskettes. These default values should keep the system running optimally in most duplication environments. However, if you wish to alter these maintenance limits in order to have the system flag the operators more or less frequently, use these instructions:

1. From the startup screen, press the **OPTION** button on the front panel.

2. Press the softkeys labeled [Setup], [System], and then [Init].

3. To edit the frequency of the drive maintenance flag, select [Drive]. Then press [Limits] and finally CLEANING.

   To edit the system maintenance limit, from the [Init] menu press the softkey labeled [Loader]. Then press MAINTLIMIT.

4. Use the left arrow to backspace over the existing value. Then use the number keys on the front panel to enter a new value for the number of diskettes duplicated between maintenance flags. Press the ACCEPT softkey to save the value and exit the edit screen.

9-1: Routine Maintenance—continued

9-1-2: Clean Drive Heads

When the 8000ST issues the drive maintenance flag message WARNING - PERFORM DRIVE MAINTENANCE!, it is time to clean the heads on the currently installed Copy Drive. As long as this drive is installed, the 8000ST will continue to issue the drive maintenance flag between jobs until the head cleaning procedure is run from the front panel. To ignore the message and continue the current job, press the softkey labeled CONTINUE. The message will still reappear at the next break in system operation.

To ensure that you get the maximum life from your drives, regular cleaning is strongly recommended. The procedure below describes the head cleaning procedure for the 8000ST. To complete the procedure, you will need the following supplies:

- Fabric-type cleaning diskette (for double-sided heads)
- Floppy diskette drive head cleaning solution

1. Apply the cleaning solution to the cleaning diskette as described in the cleaning diskette instructions. Be sure not to oversaturate the diskette. Having too little solution is better than having too much.

2. From the startup screen, press the **OPTION** button on the front panel of the 8000ST.

3. Press the softkey labeled [Utility], and then press [Clean]. Finally, press the DRIVE softkey. The system will prompt you to insert the cleaning diskette.

4. Place the diskette into the input hopper, and press the softkey labeled CONTINUE.

9-1: Routine Maintenance—continued

5. The system will clear the diskette path, insert the cleaning diskette into the drive, and run the head cleaning procedure for about 35 seconds. When the procedure is done, it will eject the diskette into the reject bin.

   If the system had been in the middle of a MiniNet job, from the startup screen, press the **OPTION** key and then RESUME to have the system rejoin the job.

The cleaning process is now complete, and you are ready to resume normal duplication. The system will automatically reset the drive maintenance count to zero.

9-1-3: Clean Diskette Rollers

The loader maintenance flag alerts the user when it is time to clean the diskette rollers which carry diskettes into and out of the Copy Drive. The flag triggers the message WARNING - PERFORM LOADER MAINTENANCE!. This message will continue to appear until you initiate the roller cleaning procedure from the software menus. To ignore the message and continue the current job, press the softkey labeled CONTINUE. The message will reappear at the next break in system operation.

Regular cleaning of the diskette rollers is strongly recommended, since dirty rollers can cause excess jamming of diskettes.

The 8000ST has four rollers (See Figure 9.1). The rear (At-Drive) roller and a second roller can be reached from the top. The two frontmost rollers can be reached by turning the unit on its side.

9-1: Routine Maintenance—continued

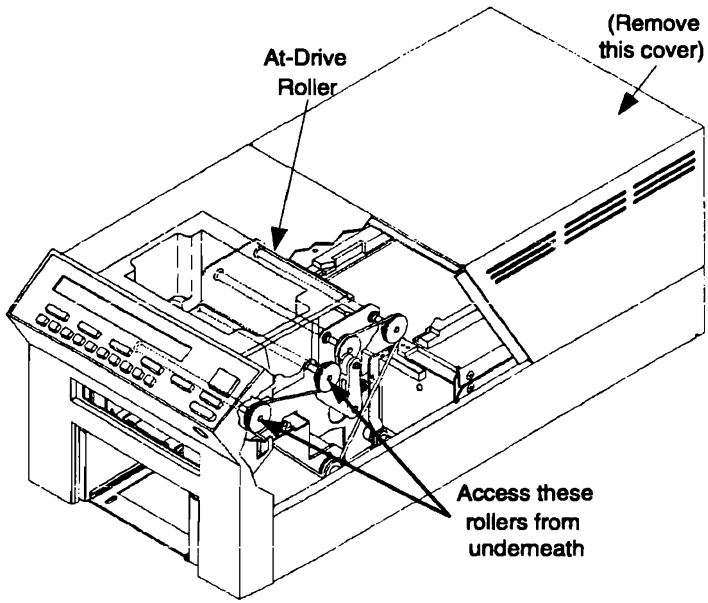

Figure 9.1: Diskette Rollers

To clean the diskette rollers, you need the following supplies:

- Cloth or long cotton swab
- Mild cleaning solution such as ammoniated window cleaner, isopropyl alcohol, or plain soap and water

Follow these instructions:

1. Loosen the thumbscrew to remove the rear cover, and remove the drive as described in Section 9-2, if necessary.
2. Dampen the cloth or swab with cleaning solution.

9-1: Routine Maintenance—continued

> **CAUTION**
> Be very careful when operating the 8000ST with the cover removed. Keep hair, jewelry, fingers, and loose clothing away from all moving parts.

3. Return to the software menus. From the startup screen, press the **OPTION** button on the front panel of the 8000ST.

4. Press the softkey labeled `[Utility]`, and then press `[Clean]`. Finally, press the `LOADER` softkey.

5. Press the `CONTINUE` softkey to start all the rollers spinning, making them easy to clean.

6. Clean each roller by pressing the cloth or swab firmly against the roller. Move the cloth back and forth along the shaft to remove all the residue.

7. When you are finished cleaning the diskette rollers, press **CLR/STOP** on the front panel to stop the rollers from spinning. Replace the drive and rear cover.

   If the system had been in the middle of a MiniNet job, from the startup screen, press the **OPTION** key and then `RESUME` to have the system rejoin the job.

The cleaning process is now complete, and you are ready to resume normal duplication. The system will reset the loader maintenance count to zero.

Section 9-2: Changing Drives

Replacing the Copy Drive on the 8000ST is a simple operation which does not require any tools or technical skills. Once the new drive is installed, no software adjustment is necessary. The system automatically determines the format of the installed drive.

> **WARNING**
> You must power down the 8000ST before replacing the Copy Drive. Failure to do so could result in serious damage to your drive.

1. Remove power from the 8000ST.

2. Remove the rear cover by loosening the thumbscrew.

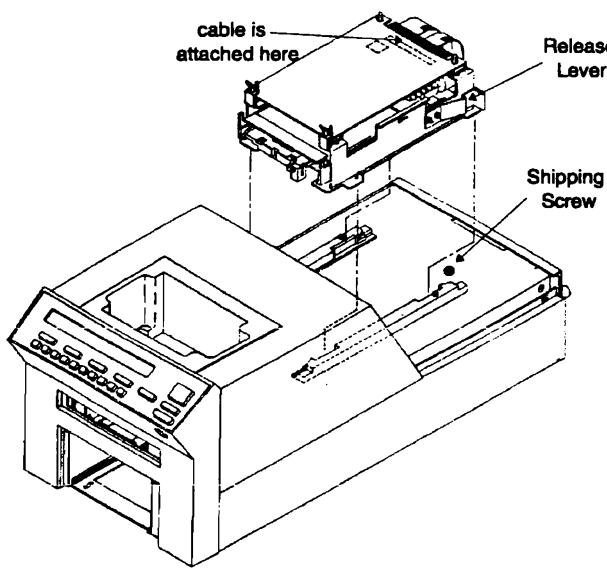

Figure 9.2: 8000ST Copy Drive

9-2: Changing Drives—continued

3. If this is the first time you are removing the drive from your system, there may be a shipping screw in place, as shown in Figure 9.2. Remove the shipping screw with a 10/32" Allen wrench. Save the shipping screw with your other packing materials in case you need to ship the 8000ST.

4. Unplug the 50-pin cable from the edge of the circuit board on top of the Copy Drive (See Figure 9.2).

5. Locate the release lever on the left side of the drive (viewed from the rear). Press the release lever inward, toward the drive. With the lever depressed, the drive should slide easily toward the rear of the unit. Slide the drive back and lift up to remove. If you are keeping this drive, store it in an antistatic bag (you can use the one from the drive you are installing).

6. Remove protective inserts and tie-wraps from the Copy Drive you are installing. Orient the new drive with the diskette opening toward the front of the 8000ST. Lower the drive onto the plastic tracks. Both sides of the drive should be at the same level, resting on the plastic tracks.

7. Slide the drive forward until you feel it lock into place.

8. Attach the cable to the Copy Drive board as shown in Figure 9.2, with no twists in the cable.

> **WARNING**
> To avoid damaging the drive, make sure the drive cable is not twisted.

9. Replace the rear cover and turn the power on.

9-2: Changing Drives—continued

The 8000ST is now ready to resume duplication. The system determines the format of the new drive and notes the number of diskettes (if any) which have already been duplicated in the new drive.

APPENDIX A
CROSS-VERIFICATION ISSUES

The 8000ST is useful as a secondary verification station for diskettes produced on other Trace equipment, such as the Series 2000 and the Series 3000. Likewise, 8000ST diskettes can be verified on the Series 2000/3000 and other Trace equipment.

However, when you cross-verify diskettes between two different Trace systems, compatibility issues may arise. Different Trace systems have slightly different methods of creating master images. This can lead to one system creating a duplication master which is not identical to the verification master on the other system.

This appendix describes the situations where cross-verification issues are likely to arise, and offers solutions to ensure that duplication and verification masters are identical. The list below shows which issues are discussed in this appendix and which formats could be affected by each issue.

- Gap Bytes (all formats)
- Magnetic Index Marks (all MFM formats)
- Turbo Mode Step Time (MFM 720K)

Section A-1: Gap Bytes

Trace industrial systems such as the 8000ST and the Series 2000/3000 verify entire tracks, including inter-sector gap bytes. This method of verification is much more critical, and therefore more effective, than verifying only the data sectors. However, two functionally equivalent diskettes can fail to cross-verify against each other if the gaps are slightly different. This section provides techniques for ensuring that your duplication and verification masters have identical gap bytes.

The 8000ST will, in most cases, successfully cross-verify diskettes which have been duplicated on a Series 2000/3000 system, when the product image file has been created from a *silver master*. A silver master is an archival or secondary master diskette recorded by professional duplication equipment such as the Series 3000 or Series 8000ST.

A *gold master*, on the other hand, is a diskette recorded by a target computer. It is the gold master that is provided to a diskette duplicator as the "original" from which copies are to be made. Because the gold master has been made on a PC, the format structure is to some degree corrupted by the presence of write splices in the gaps between its data fields. In addition, the number of gap bytes on a gold master can be interpreted differently by different duplication systems.

For these reasons, gold masters should not be used as the common source for an image to be duplicated and cross-verified. Trace recommends that customers using both systems always make a small set of silver masters on the Series 2000/3000, and that they use these silver masters as the masters for duplication and verification on both the Series 2000/3000 and the 8000ST.

A-1: Gap Bytes—continued

Table E below summarizes cross-verification capabilities between the Series 2000/3000 and the 8000ST. This table refers specifically to cross-verification using a silver master to create the image file. When cross-verifying Series 2000/3000 copies on an 8000ST, you must use a silver master to create the 8000ST verification image. To cross-verify 8000ST copies on a Series 2000/3000, both the duplication and the verification images must be created from a silver master.

Table E: Cross-Verification Using Silver Masters

Format	Cross-Verify between Systems
IBM PC (all)	yes
NEC 9801	yes
J-3100	yes
Mac 400K/800K	[A]
Mac 1.44 MB	yes
Amiga	[B], [C]
"Generic" FM/MFM	[C]

[A] Cross-verification is possible if the Series 2000/3000 is running system software A.92, Revision D or later, or if the Series 2000/3000 image is created using the index-based version of the format.

[B] Cross-verification is possible if the Series 2000/3000 image is created using the HyperTrace index-based version of the format. (HyperTrace can copy these formats with or without index.)

[C] Cross-verification of 8000ST copies on the Series 2000/3000 is only possible if the 8000ST duplication master was created on a Series 2000/3000.

A-1: Gap Bytes—continued

> **NOTE**
> Serialized and copy-protected Series 2000/3000 masters cannot be cross-verified on the 8000ST.

Cross-Verification Using Gold Masters

As described above, two different duplication systems may not create identical image files from the same gold master. Therefore, cross-verification between the 8000ST and the Series 2000/3000 is not guaranteed when a gold master is used to generate the image file for verification. However, if you choose to cross-verify using gold masters, refer to Table F for information on which formats can successfully cross-verify and the special conditions which apply.

Table F: Using a Gold Master to Create the Verification Image

Format	Cross-Verify between Systems
IBM PC (all)	[1]
NEC 9801	[2]
J-3100	[3]
Mac 400K/800K	no
Mac 1.44 MB	[4]
Amiga	no
"Generic" FM/MFM	no

[1] Cross-verification is likely if the Series 2000/3000 is running system software A.92, Revision D or later. Cross-verification may or may not be successful with earlier system software.

[2] The Series 2000/3000 image must be read in with a user generated HyperTrace template specifying the gap length as 116 bytes.

(continued next page)

[3] The Series 2000/3000 image must be read in with a user generated HyperTrace template specifying the gap length as 84 bytes.

[4] The Series 2000/3000 image must be read in with a user generated HyperTrace template specifying the gap length as 101 bytes. Do not read in the image using the IBM 1.44 MB template.

[5] The Series 2000/3000 image must be created using the HyperTrace index-based version of the format.

Section A-2: Magnetic Index Marks

This issue affects all MFM formats (all IBM PC formats, Mac HD, NEC DOS formats, and the "generic" FM/MFM formats).

As part of the process of "cleaning up" master images, previous models of the Tracer/ST (such as the Series 6000ST) recorded magnetic index marks on MFM formats, regardless of whether those index marks are present on the master diskette. The Series 2000/3000, on the other hand, does not record the index marks.

Prior versions of the Series 2000/3000 system software and previous models of the Tracer/ST all ignored the index mark during verification, so the index marks were not a problem. However, recent changes in the way both systems verify a track mean that the duplication and verification masters must have identical magnetic index marks.

The Series 8000ST has a new feature which allows you to specify whether magnetic index marks will be included on master images of MFM formats. To avoid cross-verification conflicts, the default setting is to **not** record the index marks. Use the `MAGINDX` feature, as described below, to change this setting to always add the index marks, or to copy the master diskette's index marks exactly.

When cross-verifying between two 8000STs, use the same `MAGINDX` setting to read in both the duplication master and the verification master. Trace plans to add the `MAGINDX` feature to other Tracer/ST models, but until then, the 8000ST must be set to always record index in order to cross-verify with other Tracer/ST systems.

If you cross-verifying between the Series 2000/3000 and an older Tracer/ST, or if you prefer to include the magnetic index marks, an alternate solution is to create new HyperTrace templates for each format on the Series 2000/3000. In these templates, specify to record magnetic index marks.

A-2: Magnetic Index Marks—continued

To change the MAGINDX setting, follow these instructions:

1. From the startup screen, press the **OPTION** button on the front panel. Press the softkey labeled [Setup]. Then press the key labeled [Options] and then MAGINDX.

2. The system will display a scrolling screen which allows you to specify whether magnetic index is always recorded, never recorded, or copied exactly from the master diskette. This setting affects all MFM formats.

3. Press ACCEPT to save the changes and exit the screen.

Section A-3: Turbo Mode Step Time

An issue arises if you are cross-verifying IBM 720K diskettes between the 8000ST and the Series 2000/3000. The issue is due to the fact that there are differences in step time between the 8000ST's 1200 RPM drive and Turbo mode on the Series 2000/3000.

To ensure cross-verification compatibility, you must modify the product image file on the Series 2000/3000 prior to duplication. Follow these instructions:

1. Make sure you are in the home (/usr/operator) directory. Type **tdbuild /product/«product name».p -s 30 <Return>**.

2. Type **pfcheck /product/«product name».p -r <Return>**.

Diskettes produced from the modified master image will only cross-verify on the 8000ST's 1200 RPM drive. To undo the modification, in order to create diskettes which will cross-verify on any 600 RPM drive, either reload the master image or follow these steps:

1. From the /usr/operator directory, type **tdbuild <Return>**.

2. Type **pfcheck <Return>**.

APPENDIX B
SERIES 8000ST MENU STRUCTURE

The charts below show the tree structure of the software options under the 8000ST **COPY** and **COMPARE** buttons. The menu structure of the **OPTION** button is shown on the next page. The number under each feature indicates the section of this manual which describes correct usage of the feature. Options shown in italics are only available on 8000STs which have a hard disk installed.

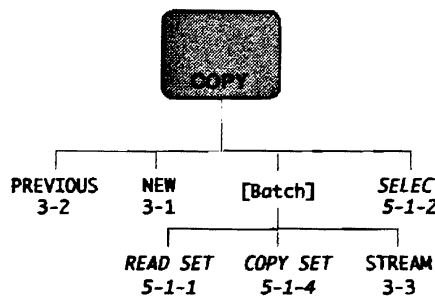

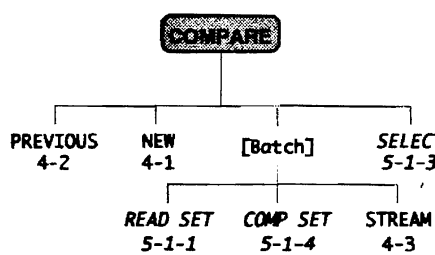

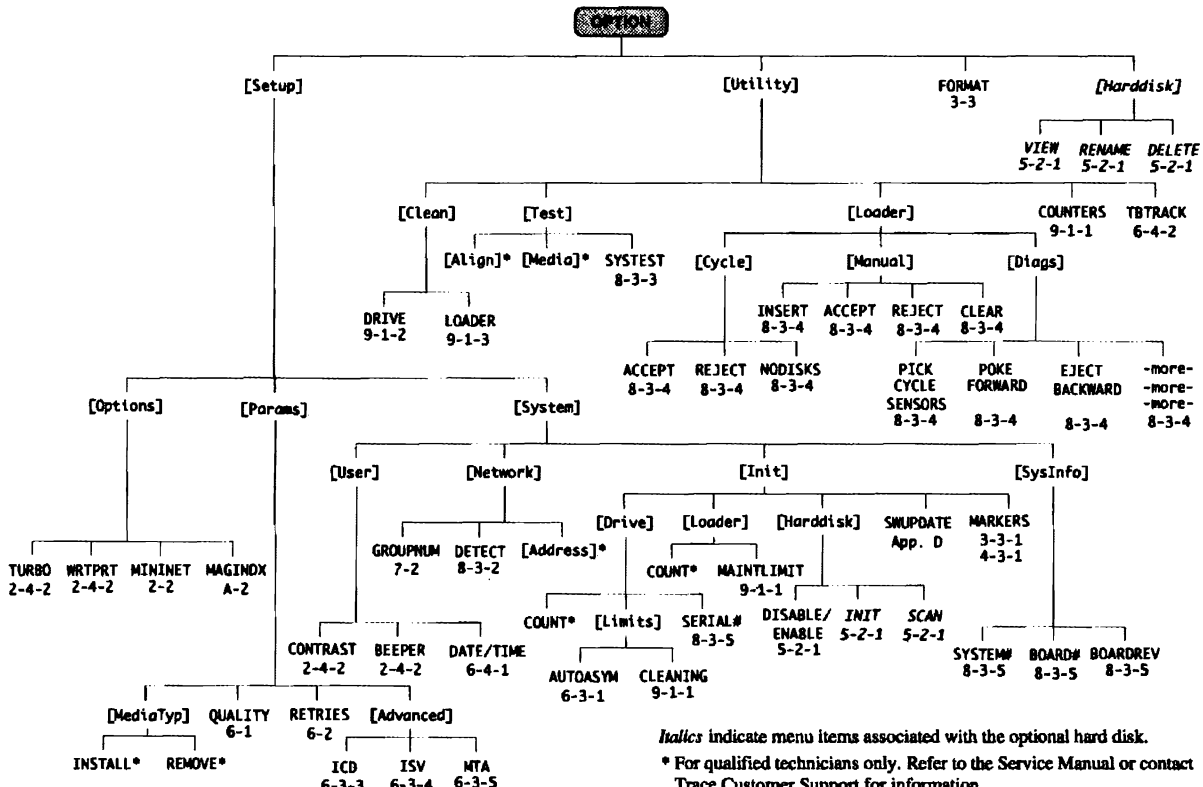

Italics indicate menu items associated with the optional hard disk.

* For qualified technicians only. Refer to the Service Manual or contact Trace Customer Support for information.

APPENDIX C
ACCESSORIES AND OPTIONS

Recommended Accessories

Trace Customer Support recommends that you stock the following equipment in order to properly maintain your 8000ST. Part numbers are provided for accessories which are available directly from Trace. For current pricing information or to order parts, contact Trace Customer Support at (800) GO-TRACE (from the U.S. or Canada) or one of the international numbers listed in the front of this manual.

Description	Purpose	Part Number
Accurite AAD, model 350/2A	on-line drive diagnostics	550-43636-01
drive cleaning kit (diskette and solution)	routine drive maintenance	550-43637-01
ammoniated window cleaning solution	clean diskette rollers	
Tracer/ST spare parts kit	routine loader maintenance	varies, depending on number of systems supported

Optional Equipment and Services

The 8000ST offers a variety of options which enable you to protect your initial investment. As your needs change, the 8000ST can also change to support your requirements.

Hard Disk

You can store frequently duplicated products on an internal hard disk for quick access, which eliminates the need to reload the image when frequent production runs of a single product are needed. To order a hard disk directly from Trace or to get a list of compatible hard disks, contact Trace Customer Support.

Extended Density Support

An upgrade will be available which allows the 8000ST to support extended density format. Extended density support requires additional RAM and a 4 MB Copy Drive. Contact Trace for the latest information on upgrade availability.

Customer Support Services

Trace Customer Support is ready to troubleshoot, support, repair, and train—minimizing downtime and maximizing productivity. Trace offers support agreements, education, preventive maintenance and repair, and technical support by phone or in person. Programs offered include:

Trace Guard Service and Support Agreements

Whether you need occasional or regular service, parts replacements, or preventive maintenance, Trace offers comprehensive and customized Trace Guard Agreements to fit your support needs. Support Agreements at reduced prices translate into increased productivity and profitability to your company. All Agreements provide Priority Technical Response and Resolution. Contact Trace Customer Support to obtain a list of the current program offerings. Note that any Trace Guard Agreement can be customized to include coverage for any or all of your Trace equipment or software.

Trace Education Training Programs

Trace has designed several comprehensive training programs which can provide you with fundamental and specialized knowledge to maximize the value of your investment. Our primary objective is to help you use and maintain your system to its maximum potential.

We offer the following types of classes:

- **Product Operation**, focusing on setup, operation, features and benefits, and routine maintenance
- **Product Maintenance**, focusing on technical aspects of troubleshooting, repair, and complex maintenance
- **Process Enhancement**, focusing on how various factors can be optimized to create more productive and efficient operation

Maintenance and Repair

Whether you need replacement parts or repair, Trace has designed flexible maintenance options with these advantages:

- Trace technicians ensure the latest product knowledge
- Genuine Trace parts, incorporating the latest Trace revisions
- Product repair requirements, servicing your equipment with the same procedures, and to the same specifications, as new equipment

Standard repair service is completed in three days, but faster turnaround is available upon request. Standard repairs are done at a Trace facility, but a Trace Field Engineer can be dispatched to your facility to perform repairs on-site to decrease downtime.

Same day parts shipments are available, but since each Trace office has slightly different requirements , contact your local office for details.

Technical Response

Trace Technical Response programs are designed to take you beyond simply servicing and maintaining your systems by establishing a resource for technical troubleshooting. We want to help you achieve optimal functionality and performance from your Trace equipment.

Trace has expertly trained Field Service and Support Engineers located throughout North America, Asia, and Europe available for preventive maintenance and repair of your equipment.

The North American Response Center's provides technical support from 6 A.M. to 6 P.M. Pacific Time, Monday through Friday. After hours and on holidays, Response Engineers are on-call for all Trace customers 24 hours a day. This 24-hour response is available to Trace Guard Agreement customers at no extra charge. Priority and Standard Technical Support options allow you to select the technical support you need.

Outside the U.S. and Canada, contact your local response center using the numbers at the front of this manual for details on support programs.

APPENDIX D
SOFTWARE UPDATES

System software upgrades for the 8000ST are shipped from Trace on high density floppy diskettes. In general, no hardware changes are necessary to install a new version of the 8000ST system software.

When you receive software updates from Trace, use these instructions to install the software:

1. Place the update diskette in the input hopper of the 8000ST.

2. From the startup screen, press the **OPTION** button on the front panel. Press the softkey labeled [Setup]. Then press the key labeled [System] and then [Init].

3. Press the softkey labeled SWUPDATE. The system will ask you to confirm that you want to overwrite the system software. Press CONTINUE to insert the update diskette into the drive and begin the update. Press QUIT to cancel at this time.

> **WARNING**
>
> Do not cancel the software update or remove power from the system during an update. Doing so may erase system memory, and make the 8000ST unusable. If the update is interrupted and you cannot power up your system, contact Trace Customer Support.

4. First, the system reads the update files. Then it begins reprogramming system memory. The first step in reprogramming memory is to erase the current system software from memory. If the process is interrupted at this point, your system will have no software installed and will be unable to operate.

5. When the update is complete, the system automatically loads the new software and repeats the startup self-test.

No further adjustments are required. The system is ready to begin copying and comparing using the revised software.

Amplitude The voltage level, or strength, of an electrical signal on the media.

Asymmetry An undesirable condition that displaces recorded bits from their ideal location. It can result from improper drive electronics adjustment, defective read/write heads, or media that has not been properly degaussed.

Byte The primary storage element in recorded media which can represent any one of 256 binary combinations of bits (single pieces of information).

Copy Drive A diskette drive modified for optimal diskette duplication performance.

Dropout Also called missing pulse. A readback pulse that is below a prescribed threshold.

Duplication Producing diskettes that are identical to a master diskette or master image by reading the information from the master, writing the information to the diskettes, and verifying the information against the master.

Eccentricity A measurement of the amount a clamped or chucked diskette is "off center," a condition which will produce undesirable variations of signal strength as a disk track is read. Eccentricity is usually caused by worn or misaligned clamping or chucking hardware in the disk drive.

Ethernet A commonly used type of high-speed network, which is used in the Trace MiniNet.

File In formatting and duplication, a term frequently used to refer to a master image when it is stored on a hard disk. (See *master image*).

Floppy Controller The electronic circuit in a computer or duplication system which encodes data to be written to a disk, decodes data read from a disk, and controls the mechanical operation of the disk drive.

FM (Frequency Modulation) A diskette recording technique used primarily in early 8" and 5.25" diskette formats. Often called single-density. Generally phased out in favor of MFM, although some formats retain a single FM track (track 0) for compatibility.

Generic Format Any of a large variety of formats which comply with general FM/MFM encoding standards, and which can be analyzed and duplicated successfully by the 8000ST. Most popular formats are specifically recognized and defined by the 8000ST, making the "generic" format analysis process unnecessary in most cases.

Gold Master A diskette made on a PC or workstation. Although the gold master is the original diskette, it has multiple write splices on each track, and therefore is of lower quality than professionally duplicated copies of the gold master. (See also *silver master*.)

Hard Disk A large-capacity rigid recording media.

Hardgroup A group of 8000STs which are physically connected and which all have the same group number.

Head Azimuth The angle of the drive read/write head's core to the track on the disk, measured in sixtieths of a degree (minutes) from perpendicular. Ideally, the azimuth should be zero, but some deviation from this ideal is usually acceptable.

Hopper A bin in the 8000ST where diskettes are held before or after they are loaded into the Copy Drive.

Index-to-Data An arbitrary, standardized timing measurement which ensures that the drive head will start reading or writing a track in the same place as all other drives adjusted to this standard. Index-to-data time is usually expressed in microseconds.

Index-to-Mark A measurement of the timing between the drive's index signal and the first address mark on a given track. Before ejecting a duplicated diskette, Trace ICD returns to track 0 and measures the index-to-mark timing to ensure that the diskette was not mischucked when the track was written.

Kilobyte (KB or K) Approximately one thousand bytes (See *byte*).

Load The process of reading the information from a master diskette or a hard disk file and saving the information as a master image in RAM (temporary memory), so that it can be duplicated or verified against.

Loader The mechanical portion of the 8000ST which handles diskette loading and ejecting.

Marker Disk In a stream job, the specially prepared disk which is inserted before every master diskette. Marker disks have a unique recording which is written with a strong write current on track 0, and cannot be read or duplicated by the 8000ST or other professional duplication systems.

Master Diskette Original diskette whose contents are copied onto *target diskettes*.

Master Image A file created in RAM (temporary memory) which contains all the information from the original master diskette. This information is copied to diskettes or compared against already duplicated diskettes. Master images can also be stored as files on the optional hard disk.

Master System In MiniNet operation, the 8000ST designated by the user to be the system from which network operations are controlled. (See also *slave system* and *MiniNet*.)

Megabit (Mb) Approximately one million bits, or one thousand kilobits.

Megabyte (MB) Approximately one million bytes, or one thousand kilobytes (See *byte* and *kilobyte*).

Memory The area of the 8000ST where the master image is stored while it is being copied to target diskettes. The 8000ST has a fixed amount of temporary memory (also called RAM), where loaded files are stored while the 8000ST is powered on. The 8000ST will not keep the information in RAM after being turned off. If you have an optional hard disk installed, you can save the information permanently. Hard disk storage capacity is also limited, but not nearly as much.

Menu A list of operations to choose from, by pressing a softkey.

MFM (Modified Frequency Modulation) A diskette recording technique similar to FM, but with twice the capacity. Commonly known as double-density. Supported by most diskette controller hardware, MFM is used by IBM and most IBM-compatible manufacturers.

MiniNet An Ethernet network of 8000STs which perform shared duplication and verification.

Mischucking The incorrect placement of a diskette in the drive which results in diskettes being produced with extreme modulation, making them unreadable in most cases. (See also *modulation*.)

Missing Pulse Also called dropout. A readback pulse that is below a prescribed threshold.

Modulation Distortion of the readback signal amplitude.

Radial Alignment A measurement of drive head position accuracy along the disk radius traveled by the head as it steps from track to track; therefore, a measurement of how close the drive comes to being exactly "on-track."

RAM The area of the 8000ST where the master image is stored while it is being copied to target diskettes. The 8000ST has a fixed amount of RAM, where loaded files are stored while the 8000ST is powered on. The 8000ST will not keep the information in RAM after being turned off. If you have an optional hard disk installed, you can save the information permanently. Hard disk storage is also limited, but not nearly as much.

Read Method by which a computer receives information from a diskette (by "reading" the diskette).

Scrolling Screen On the 8000ST, a display on the LCD which shows a list of files or options one at a time. To scroll through all the options, two of the softkeys are labeled with up and down arrows.

Set A group of master diskettes of the same format that is read in to the system to be stored on the optional hard disk. Master images read in as a set are given related names by the system, and are always linked on the hard disk. They can be duplicated, renamed, or deleted as a set.

Silver Master A master diskette which was created on a professional duplication system. A silver master has all the data information from the original gold master, but the data is arranged according to the ideal format specification, ensuring that all sectors and gaps are the correct size. In addition, there is only one write splice per track.

Slave System In MiniNet operation, the 8000STs designated by the user as systems to be controlled by the master system (See also *master system* and *MiniNet*.)

Softgroup A group of networked 8000STs which function together on a single job, independently of other networked units.

Softkey One of the four blank keys on the 8000ST front panel. Unlike other 8000ST keys, softkeys perform different functions in every menu. The name of the function associated with each softkey appears on the LCD immediately above the softkey. When there is no label above a softkey, that softkey will not perform any function.

Startup Screen The standard display and introductory screen for the 8000ST, from which all menus can be accessed.

Station One 8000ST which is part of a MiniNet network.

Stream Make or verify copies of multiple masters in streamlined fashion. On the 8000ST, this is accomplished by placing a specially prepared *marker disk* before each master diskette, and stacking target diskettes on top of the master.

Subnetwork See *softgroup*. In this manual, the term does not refer to normal Ethernet subnetworking.

System A term used to refer to one 8000ST.

TAA (Track Average Amplitude) See *amplitude*.

Target Diskette An unformatted or formatted diskette which will become a copy of the master diskette.

Track A circular portion of the media's surface that is magnetically organized to accommodate information based on a specific operating system. 5.25" high density diskettes and all 3.5" diskettes contain 80 concentric tracks, and 5.25" low density diskettes contain 40 tracks.

Turbo Mode A patented Trace technology which speeds up duplication of MFM diskettes by up to 25%. When Turbo mode is enabled, the 8000ST starts writing each track at the first available sector after stepping, instead of waiting for index. Turbo mode does not violate format specifications.

Unit A term used to refer to one 8000ST.

Verification A quality assurance process that protects against write errors and media failures by comparing the data actually written on the diskette to the data that was on the master diskette.

Window During copy and compare operations, the 8000ST verifies that each bit of data is placed within a format-specified data window. To increase the likelihood that diskettes will be universally readable, you can apply stricter rules of data placement, and reject diskettes which do not conform. A window is the percentage of the normal data area which you choose to use for data placement. Therefore, a smaller window percentage represents a more stringent requirement on bit placement. Variable window settings are a standard feature on the 8000ST.

Write An operation which places the data on a diskette.

Write-Protection A method of protecting the information on a diskette. Write-protection on a 3.5" diskette consists of a small tab that slides towards the edge of the diskette (revealing a small hole). The opposite of write-protected is write-enabled.

Write Splice The discontinuity on a diskette that results when a write operation is started or stopped, especially over a formatted track.

1MB DISK error 114
2MB DISK error 114
4MB DISK error 115
A/D CONVERTER BUSY error 115
AAD 150, 183
    manual tests ..... (see the Service Manual)
accept hopper 12
    install 12
accessories
    recommended 183
advanced maintenance and diagnostics ..... (see the Service Manual)
AME analyzer 96
amplitude
    minimum 93
amplitude (definition) 189
amplitude tests ..... (see the Service Manual)
ANALYSIS FAILED error 115
[Analyze] ..... (see the Service Manual)
Apple II GS 4
asymmetry
    compensation 88
    definition 189
    explanation ..... (see the Service Manual)
AUTOASYM 89
AZIMUTH BURST NOT FOUND error 116
BACKPLANE EEPROM CHECKSUM FAILED! error 116
BACKPLANE IS INCOMPATIBLE WITH SOFTWARE error 116
BAD ASYMMETRY MEASUREMENT ZONES error 116
BAD ASYMMETRY TABLE POINT error 117
base drive replacement ..... (see the Service Manual)
batch ..... (see set)
beeper 26
    disable 25
    enable 25
BOARD# 160
BOARDREV 159
byte (definition) 189
CAN'T FIND AAD RADIAL LOBES error 117
CAN'T IDENTIFY DISK'S FORMAT error 118

CANNOT READ A MARKER DISK! error 117
capacity of Series 8000ST 2
chapter summary 6
[Clean] 165, 168
clean drive heads 165
cleaning 162, 164
cleaning diskette 165, 183
clock 95
CLR/STOP button 21
command keys 21
compare
    CopySet 72
    networked 102
    NEW 48
    no save 47
    PREVIOUS 52
    quantity 49, 52, 70
    SELECT 69
    STREAM 55
COMPARE button 21, 47
    menu structure 181
COMPARE error 118
compare job
    abort 50, 53, 71
configuration
    hardware 24
CONTRAST 26
copy
    format-only 43
    networked 102
    NEW 32
    no save 31
    PREVIOUS 36
    quantity 32, 36, 67
    SELECT 67
    STREAM 39
COPY button 21, 31
    menu structure 181
Copy Drive
    cable 170
    diagnostics 150
    install 169
    remove 169

Copy Drive (definition) 189
copy job
    abort 34, 37, 68
copy-protection 4
CopySet 60
    compare 72
    compare rejects 73
    copy 72
    read-in 63
    rejects 73
CopyStream
    compare 55
    copy 39
counters 163
    diskette 162
    reset 163
CPU EEPROM CHECKSUM FAILED! error 118
Customer Support ..... preface
    support services 184
[Cycle] 156
data placement parameters 84
date
    enter 95
DATE/TIME 95
degauss, drive head 89
DELETE 77
delete file 77
DETECT 153
diagnostics 150
    drive 150
    loader 156
    self-test 17
DIAGNOSTICS FAILED error 119
[Diags] 158
directory
    view 75
directory structure 59
DISABLE 79
diskette
    jams 147
diskette counters 162
diskette rollers
    location 166

diskettes
fail 112
format 43
jams 112, 166
orientation in input hopper 20
reject 112
yield 34, 50
display
cannot read 27, 112
contrast 26
drive
adjustment ....(see the Service Manual)
alignment 150
base drive replacement ....(see the Service Manual)
cable 170
counter 162
diagnostics 150
install 169
maintenance 165
motor speed 92
remove 169
specifications ....(see the Service Manual)
type 24
DRIVE BOARD INCOMPATIBLE WITH SOFTWARE! error 119
DRIVE EEPROM CHECKSUM FAILED! error 119
drive head magnetization 89
drive heads
clean 165
DRIVE TYPE HAS CHANGED! error 119
dropout 84
dropout (definition) 189
DROPOUT error 120
DUPLICATE FILE NAME error 120
DUPLICATE SET NAME error 120
duplication
abort 34, 37, 68
basic 32
networked 102
quantity 32, 36, 67
status messages 114
duplication (definition) 189
eccentricity (definition) 189
ENABLE 79

error codes 147
error condition 112
ERROR FINDING TRACK DATA error 121
ERROR IN MASTER IMAGE CHECKSUM error 121
ERROR IN MASTER IMAGE READ error 121
ERROR IN MASTER IMAGE WRITE error 122
error messages 114
Ethernet (definition) 189
Ethernet connector
    location 15
extended density 134
extended density support 184
FAILED AZIMUTH CALCULATION error 122
FAILED CALHEAD ASYMMETRY CALCULATION error 122
failed diskettes 112
FAN NOT CONNECTED! PLEASE TURN UNIT OFF! error 123
FATAL ERROR 123
FC BOARD AND DRIVE ARE NOT COMPATIBLE! error 123
FC BOARD IS INCOMPATIBLE WITH SOFTWARE! error 124
FC FPGA PROGRAM FAILED error 124
FC INTERNAL error 124
FCC compliance ..... preface
features of Series 8000ST 2
file
    delete 77
    name 62, 66
    rename 76
    view directory 75
file (definition) 189
file maintenance 75
FIRST DISK MUST BE A MARKER DISK! error 124
FLOPPY CHANNEL DMA LOST error 125
FLOPPY CHANNEL EEPROM CHECKSUM FAILED! error 125
floppy controller (definition) 190
FLOPPY INTERRUPT HANDLER ERROR 125
FM (definition) 190
FORMAT 43
    generic 190
format-only 43
formats
    Apple II GS 4
    extended density 184
formats recognized 4

formatting
abort 44
front panel 21
generic format (definition) 190
glossary 189
gold master 174
gold master (definition) 190
group number 108
GROUPNUM 108
[Harddisk] 75, 76, 77
hard disk 59, 184
compare against 69
copy from 67
corrupt 80
definition 190
delete file 77
diagnostics 80
directory structure 59
disable 78
enable 78
file maintenance 75
format 79
initialize 79
load multiple masters 63
maintenance 78
master image stored 67, 69
rename file 76
save master image 61
space available 60, 75
system does not recognize 78, 113
troubleshooting 78, 113
view files 75
HARDDISK FILE CLOSE ERROR 125
HARDDISK FILE CREATION ERROR 125
HARDDISK FILE OPEN ERROR 126
HARDDISK (IS) FULL error 126
HARD DISK VOLUME HAS BEEN CORRUPTED error 126
hardgroup 107
hardgroup (definition) 190
hardware
revision level 159
hardware configuration 24
head azimuth (definition) 190

head magnetization 89
help 22
hopper
    installing 12
hopper (definition) 190
HRD error 127
HyperCopy 2
ICD 90
idle
    definition 102
image file
    size 60
impedance
    MiniNet 14, 154
IMPROPER RADIAL LOBES error 127
In-Process Chucking Detection 90
INCOMING FILE HAS UNKNOWN HEADER error 127
INCORRECT DRIVE TYPE error 127
INCORRECT TIMING BETWEEN LOBES error 128
INDEX BURST NOT FOUND error 128
INDEX TO MARK TIMING ERROR 129
INDEX-MARK error 128
index-to-data (definition) 191
index-to-mark (definition) 191
index-to-mark timing 90
information
    help 22
INIT 80
input hopper 12
    empty 34, 37, 50, 53, 68, 71
    install 12
INPUT HOPPER EMPTY message 129
interface 21
interference ..... preface
INVALID DRIVE TYPE error 129
INVALID FLOPPY CHANNEL REV error 129
INVALID FORMAT error 130
INVALID MEDIA DENSITY error 130
INVALID PRECOMP TABLE error 130
INVALID WRITE CURRENT TABLE error 131
ISV 92
ISV error 131

jam
    location 147
jam codes 147
jamming 112, 166
job stream (definition) 194
keyboard 21
keywords
    TraceBack 98
kilobyte (definition) 191
LCD 21
    cannot read 27, 112
    contrast 26
    error messages 114
Life Cnt 163
load
    set to hard disk 63
load (definition) 191
load master 32, 33, 48, 49
load master to hard disk 61
[Loader] 156
loader 156
    definition 191
    jams 147
    maintenance 166
    .....(also see the Service Manual)
    mechanical operation .....(see the Service Manual)
LOADER JAM error 131
LOW MARGIN error 132
LOW TAA error 133
maintenance 161
    advanced .....(see the Service Manual)
    clean rollers 166
    routine 162
maintenance flag 162
maintenance limit 163
    change 164
MAINTLIMIT 164
[Manual] 157
manual
    overview 6
marker disk (definition) 191
MARKER error 133
MARKERS 40, 56

master
gold 174
load 32, 33, 48, 49
load to hard disk 61
load to hard disk as set 63
silver 174
master system (definition) 192
master diskette (definition) 191
MASTER FORMAT DOES NOT MATCH ... error 133
master image
name 62
master image (definition) 191
master image error
must read in a master image 36, 52
master system 102
media
diagnostics ..... (see the Service Manual)
extended density 134
MediaTyp 100
megabyte (definition) 192
memory (definition) 192
menu
display 22
select option from 22
menu (definition) 192
menu structure 181
MFM (definition) 192
MiniNet 2, 17, 101
configuration 13
disable 18
enable 17
equipment needed 14
errors 152
exclude a unit 107
grouping 107
hardgroup 107
impedance rating 14, 154
master system 102, 108
not communicating 152
recommendation 108
requirements for performing a job 102
slaves 102
softgroup 107

MiniNet (cont.)
software setup 17
subnetwork 107
MiniNet (definition) 192
MISC. FILE ERROR 134
mischucking (definition) 192
missing pulse 84
missing pulse (definition) 192
Mnt Cnt 163
modulation (definition) 193
MPC 84
MT100 96
MT100 diskette analyzer 100
MTA 93
MTA setting 133
mtread 97
MUST READ IN A MASTER IMAGE error 36, 52, 134
MUTE 34
[Network] 108, 153
network 2
configuration 13
status message 105
NEW 32, 48
NO ADDRESS MARKS FOUND error 134
NO DRIVE ATTACHED error 135
NO DRIVE EE CORR VALUES error 135
NO DRIVE IN THE SYSTEM error 135
NO FC ATTACHED error 135
NO FILES FOUND error 135
NO FLOPPY CHANNEL EE CORR VALUES error 135
NO INDEX error 136
NO MEMORY AVAILABLE (FOR IMAGE) error 136
NO PROPER MASTER IMAGE error 136
NO SETS FOUND error 137
NO VRF DMA error 137
NO WRT DMA error 137
NOT A VALID ALIGNMENT DISK error 137
NOT VALID MEDIA! error 138
option
select 22
OPTION button 21
menu structure 181
optional equipment 184

options
installed 25
orientation 19
diskettes in input hopper 20
overview 6
[Params] 85
part numbers 183
parts
external 19
internal 20
order 183
pass/fail count 34, 50
power off 18
power on 17
precompensation 4, 100
optimization ..... (see the Service Manual)
preventive maintenance 162
PREVIOUS 36, 52
QUALITY 85
quality control 83
quality parameters 84, 105
QUALITY PARAMS BELOW DEFAULT ... warning 138
quantity 32, 36, 49, 52, 67, 70
radial alignment (definition) 193
RAM
master image stored 35, 36, 51, 52
RAM (definition) 193
read (definition) 193
READ SET 63, 64
READ TRACK ERROR 138
ReadSet 60, 63
REDEFINE 107
reject
cause 114
rejected diskettes 112
RENAME 76
rename file 76
RESUME 105
RETRIES 86
RETRIES error 139
retry limits 86
REVERIFY 139
revision levels 159

rollers
clean 166
location 166
routine maintenance 162
RPM ERROR 140
SCAN 80
scrolling screen 23
scrolling screen (definition) 193
SELECT 67, 69
self-test 17, 155
serial numbers
view 159
SERIAL# 160
set (definition) 193
set read-in 63
shutdown 17
silver master 174
silver master (definition) 193
slave system (definition) 193
slaves 102
softgroup 107
softgroup (definition) 194
softkey (definition) 194
softkeys 21
software
install 187
revision level 24, 159
software update
install 187
warning 187
spare parts ....(see the Service Manual)
startup 17
startup screen 17, 22, 194
return to 22
station (definition) 194
status messages 114
STEP ERROR 140
stream (definition) 194
subnetwork 107
subnetwork (definition) 194
support services 184
SW MODEL NUMBER DOES NOT MATCH ... error 141
SWUPDATE 187